WEB-2040

Web-based controller

User's Manual

Copyright notice

This document is copyrighted, 2000, by Advantech Co., Ltd. All rights are reserved. The original manufacturer reserves the right to make improvements to the products described in this manual at any time without notice.

No part of this manual may be reproduced, copied, translated or transmitted in any form or by any means without the prior written permission of the original manufacturer. Information provided in this manual is intended to be accurate and reliable. However, the original manufacturer assumes no responsibility for its use, nor for any infringements upon the rights of third parties which may result from such use.

Acknowledgements

IBM, PC/AT, PS/2 and VGA are trademarks of International Business Machines Corporation.

Intel® and Pentium® are trademarks of Intel Corporation.

Microsoft Windows and MS-DOS are registered trademarks of Microsoft Corp.

C&T is a trademark of Chips and Technologies, Inc.

All other product names or trademarks are properties of their respective owners.

Part No. 2006200000

1st Edition Printed in Taiwan March 2000

Product warranty

Advantech warrants to you, the original purchaser, that each of its products will be free from defects in materials and workmanship for one year from the date of purchase.

This warranty does not apply to any products that have been repaired or altered by persons other than repair personnel authorized by Advantech, or which have been subject to misuse, abuse, accident or improper installation. Advantech assumes no liability under the terms of this warranty as a consequence of such events.

Because of Advantech high quality-control standards and rigorous testing, most of our customers never need to use our repair service. If an Advantech product is defective, it will be repaired or replaced at no charge during the warranty period. For out-of-warranty repairs, you will be billed according to the cost of replacement materials, service time and freight. Please consult your dealer for more details. If you think you have a defective product, follow these steps:

1. Collect all the information about the problem encountered. (For example, CPU speed, Advantech products used, other hardware and software used, etc.) Note anything abnormal and list any on-screen messages you get when the problem occurs.
2. Call your dealer and describe the problem. Please have your manual, product, and any helpful information readily available.
3. If your product is diagnosed as defective, obtain an RMA (return merchandize authorization) number from your dealer. This allows us to process your return more quickly.
4. Carefully pack the defective product, a fully-completed Repair and Replacement Order Card and a photocopy proof of purchase date (such as your sales receipt) in a shippable container. A product returned without proof of the purchase date is not eligible for warranty service.
5. Write the RMA number visibly on the outside of the package and ship it prepaid to your dealer.

Packing list

Before installing your board, make sure that the following materials have been received:

- 1 warranty certificate
- This user's manual
- Y cable (p/n 1700060201)
- Phoenix power connector (p/n 1652002202)
- 44-pin IDE cable (p/n 1701440350)
- VGA cable (p/n 1703150101)

If any of these items are missing or damaged, contact your distributor or sales representative immediately.

Technical support and sales assistance

If you have any technical questions about the WEB-2040 or any other Advantech products, please visit our support website at:

http://www.advantech.com/support

For more information about Advantech's products and sales information, please visit:

http://www.advantech.com

Contents

Tables

Figures

CHAPTER 1

Hardware Configuration

This chapter gives background information on the WEB-2040. It shows you how to configure the board to match your application and prepare it for installation into your system.

Sections include:

- Introduction
- Specifications
- Safety precautions
- Jumper settings

installing an on-board CompactFlash Disk

Chassis dimension

1.1 Introduction

Advantech's new MicroBox PC, the WEB-2040, is truly an all-in-one 486 processor-based controller. It comes equipped with 32 MB DRAM, a 10/100Base-T Ethernet interface, twoDB-9 RS-232 and one RS-485 serial port, 6 digital input and 6 high drive digital output, and a Phoenix connector for DC 24 V power input.

In addition, the WEB-2040 is equipped with two CompactFlash™ solid state disk socket which functions as an emulated hard disk. Several interfaces are also reserved, including an IDE interface and a SVGA interface which supports CRT monitors with up to 4 MB display memory. With its industrial grade reliability, the WEB-2040 can operate continuously at temperatures up to 60° C (122° F). This compact unit offers all these functions within a hand-sized chassis, measuring merely 164.8 x106.5 x 35.5 mm. The WEB-2040 can be wall mounted. The rugged die-cast aluminum chassis that houses the WEB-2040 serves a dual purpose. Not only does it offer excellent physical and EMI component protection and convenient access to all connections, it is also a functional heat sink for heat dissipation.These numerous features provide an ideal price/performance solution for commercial and industrial applications where reliability and stability are essential.

The WEB-2040 is compact, highly integrated and easy to maintain and install. These features make it ideal for applications such as small industrial controllers, security systems, Internet gateways, Web servers, laboratory instruments, building automation, and so on.

1.2 Specifications

1.2.1 General

- **CPU**: 486-66 MHz
- **Memory**: 32 MB DRAM
- **10/100 Base T Ethernet interface:**

  -Chipset: RTL-8139 PCI local bus Ethernet controller

  -Ethernet interface: IEEE 802.3 compatible 100/10Base T interface
- **Serial ports**: Two RS-232, One RS-485.

  -Two DB9 RS-232 interface (COM 1,2)

  -One DB-9 RS-485 (COM 3)
- **VGA with 64 bit Windows accelerator:**

  -Display memory: 4MB share memory architecture (UMA structure)

  -Display resolution: 1024*768@16M colors
- **PS/2 KB/Mouse:** supports standard PC/AT keyboard and PS/2 mouse
- **Reset button**
- **GPIO:** One DB-15 connector (Male) for 6 D/I, 6 D/O with protection, 1 Vcc and 2 GND pin
- **Digital input :** Digital input: input voltage:

  low: 0.5 V max., high: 2.4 V min.
- **Digital output:** output voltage-open collector 5-40 V DC

  sink current: 200 mA max.
- **Solid state disk**: supports one internal CompactFlash™ socket and one external CompactFlash™ socket as an emulated HDD
- **LED**: one power LED, one HDD LED and four status LED

1.2.2 Internal Interfaces

- **Enhanced IDE hard disk drive interface**: Supports up to two hard disk drives.

1.2.3 Mechanical and environmental

- **Power supply voltage**: 24 V DC (input range 12-35 V DC)
- **Max. power requirements**: +24 V @ .5 A
- **Operating temperature**: 0 ~ 50° C (32 ~ 122° F)
- **Chassis size**: 164.8 x 106.5 x 35.5 mm
- **Weight**: .7kg

1.3 Safety precautions

The following sections tell how to make each connection. In most cases, you will simply need to connect a standard cable. All of the connector pin assignments are shown in Appendix A.

Warning! *Always completely disconnect the power cord from your PC chassis whenever you are working on it. Do not make connections while the power is on. Sensitive electronic components can be damaged by a sudden rush of power. Only experienced electronics personnel should open the PC chassis.*

Caution! *Always ground yourself to remove any static charge before touching any PC board or card. Modern electronic devices are very sensitive to static electric charges. Use a grounding wrist strap at all times. Place all electronic components on a static-dissipative surface or in a static-shielded bag when they are not in the PC chassis.*

1.4 Jumper settings

This section tells how to set the jumpers to configure your board. It gives the board default configuration and your options for each jumper. After you set the jumpers and install the board, you will also need to run your BIOS Setup program to configure the serial port addresses, floppy/hard disk drive types and system operating parameters. Connections, such as hard disk cables, appear in Chapter 2.

You configure your board to match the needs of your application by setting jumpers. A jumper is the simplest kind of electric switch. It consists of two metal pins and a small metal cap (often protected by a plastic cover) that slides over the pins to connect them. To "close" a jumper, connect the pins with the cap. To "open" a jumper, remove the cap. Sometimes a jumper will have three pins, labeled 1, 2 and 3. In this case, connect either pins 1 and 2 or 2 and 3.

You may find a pair of needle-nose pliers useful for setting the jumpers.

If you have any doubts about the best hardware configuration for your application, contact your local distributor or sales representative before you make any changes.

1.4.1 Reset (J3)

Connect a wire from a reset button to J3. To "close" J3 will activate a reset.

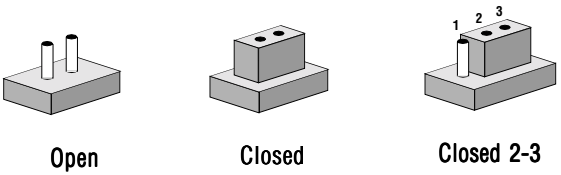

Figure 1-2: Board layout: dimensions (solder side)

1.4.2 RS-485 Function Selection (JP2)

Table 1.4.2 RS 485 Function Selection (JP2)

Function	1-2	3-4	5-6
Auto switch (default)	closed	open	-
RTS control	open	closed	-
speed (115.2 Kbps)	-	-	open

1.4.3 External CompactFlash™ master/slave selection (JP3)

Table 1.4.3 External CompactFlash™ master/slave selection (JP3)

Function	1-2
Master	closed
Slave	open

1.5 Installing an on-board CompactFlash™ disk

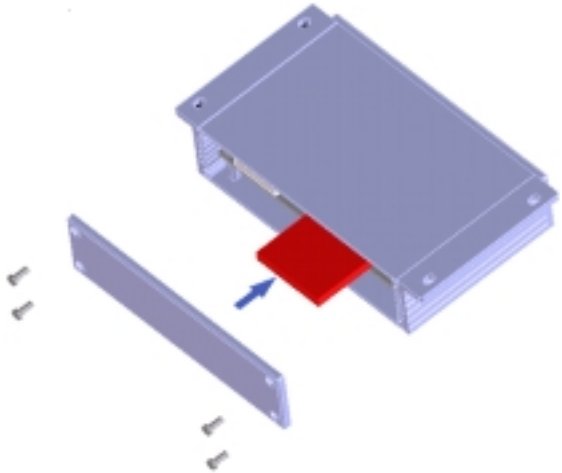

Figure 1-1: installation of on-board CompactFlash™ disk

The procedure for installing a CompactFlash™ into the WEB-2040 is as follows. (see Fig.1-1) Please follow these steps carefully.

1. Unscrew four screws from the back cover of the WEB-2040.

2. Remove the back cover.

3. Plug a CompactFlash™ disk with user's OS and application program into a CompactFlash™ socket.

4. Screw back the cover with four screws.

1.6 Chassis: dimensions

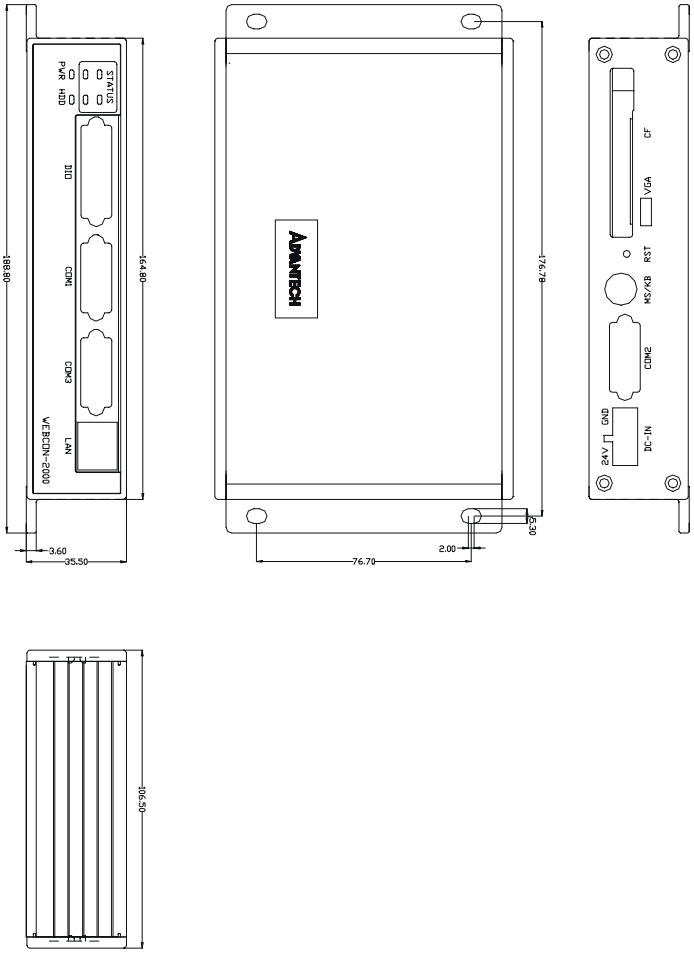

Figure 1-2 Chassis dimensions

CHAPTER 2

Connecting Peripherals

This chapter tells how to set up the WEB-2040's hardware, including connecting peripherals, switches and indicators.

2.1 Introduction to connectors

The following table lists the connectors on the WEB-2040.

Table 2.1: Connectors

Number	Function
CN1	COM3 RS-485 connector
CN2	COM1 RS-232 connector
CN3	Digital I/O connector
CN4	Ethernet connector
CN5	IDE connector
CN6	Extended CompactFlash socket
CN7	Phoenix power connector
CN8	Keyboard and PS/2 mouse connector
CN9	COM2 RS-232 connector
J1	Reset Button
JP4	VGA connector

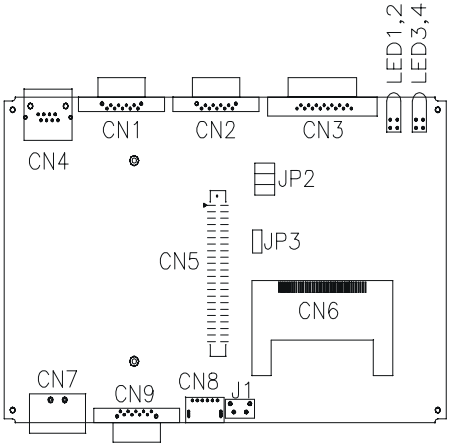

Figure 2-1: Board layout; connector locations (component side)

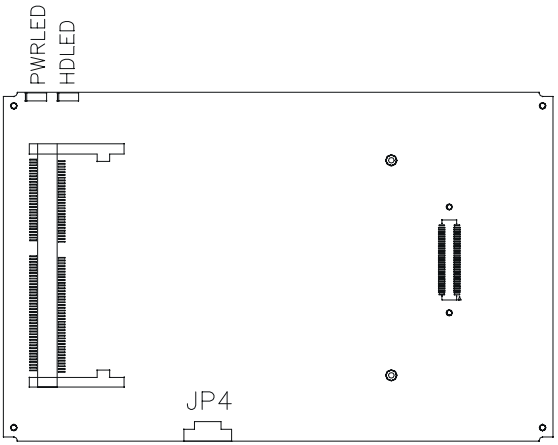

Figure 2-2: Board layout; connector locations (solder side)

2.2 Serial ports (CN1: COM3/ RS485;CN2:COM1/RS-232;CN9:COM2/RS-232

The WEB-2040 offers three serial ports: COM 1(RS-232), COM 2

(RS-232) and COM 3 (RS-485). These ports allow you to connect to serial devices (a mouse, printers, etc.) or a communications network. You can select the address for each port (for examlpe, 3F8H [COM1],

2F8H [COM2) or disable each port.

Different devices implement the RS-232 standard in different ways. If you are having problems with a serial device, be sure to check the pin assignments for each connector.

COM1 and COM2 are RS-232 serial ports. The IRQ and addresss range are both fixed. However, if you wish to disable the port or change these parameters later, you can do this in the system BIOS setup. The table below shows the settings for the WEB-2040 board's ports:

Table 2-2: Webcon-2000 board's port default settings

Port	Address	Interrupt	Default
COM1	3F8	IRQ4	3F8
COM2	2F8, 2E8	IRQ3	2F8
COM3	3E8	IRQ5	3E8

2.3 Digital I/O connector (CN3)

The WEB-2040 is equipped with six digital inputs and six open collector digital outputs. The open collector output with capability of 200 ma current sink can be used to drive the delay or transistor switch. A pull-up resistor is added to ensure output is held at a high level when exchanging digital signals with other TTL devices.

Digital output port (address: address 308h)

Bit	Digital output
7	N/C
6	N/C
5	DO5
4	DO4
3	DO3
2	DO2
1	DO1
0	DO0

DO 0~5	Digital output
1	TTL low
0	TTL high (add a pull-up resistor)

Digital input port (address: 300h)

Bit	Digital input
7	N/C
6	N/C
5	DI5
4	DI4
3	DI3
2	DI2
1	DI1
0	DI0

2.4 Ethernet connector (CN4)

The WEB-2040 is equipped with a high performance 32-bit PCI-bus Fast Ethernet interface which is fully compliant with IEEE 802.3u 100/10Base-T specifications. It is supported by all major network operating systems.

2.5 Enhanced IDE connector (CN5)

You can attach two IDE (Integrated Device Electronics) drives to the WEB-2040 for software installation or system testing. The WEB-2040 has an EIDE connector, designated CN5. Wire number 1 on the cable is red or blue, and the other wires are gray. Connect one end to connector CN5 on theboard. Make sure that the red (or blue) wire corresponds to pin 1 on the connector (on the right side). See "Board layout: connector locations" earlier in this chapter for help in finding the connector.

Unlike floppy drives, IDE hard drives can connect in either position on the cable. If you install two drives, you will need to set one as the master and one as the slave. You do this by setting the jumpers on the drives. If you use just one drive, you should set it as the master. See the documentation that came with your drive for more information. Connect the first hard drive to the other end of the cable. Wire 1 on the cable should also connect to pin 1 on the hard drive connector, which is labeled on the drive circuit board. Check the documentation that came with the drive for more information.

Connect the second drive, as described above, to CN5.

2.6 External CompactFlash™ (CN6)

This socket accepts an IDE-compatible CompactFlash™ memory card. The CompactFlash™ interface uses a primary IDE channel, which could be set as the master channel or slave device by changing the setting of JP3.

2.7 Power connector (CN7)

The Webcon-2000 comes with a Phoenix connector which carries 24 V DC external power input. The Webcon-2000 can get power from CN7.

2.8 Keyboard and PS/2 mouse connector (CN8)

The Webcon-2000 board provides a keyboard connector. A 6-pin mini-DIN connector (CN8) is located on the board mounting bracket. The board comes with an adapter to convert from the 6-pin mini-DIN connector to a standard DIN connector and to a PS/2 mouse connector.

2.9 Reset button 9 (J1)

To "press" J1 will activate a reset.

2.10 VGA display connector (JP4)

The Webcon-2000 provides a VGA controller for a high resolution VGA interface. The VGA interface is reserved for system testing and debugging. The Webcon-2000's JP4 is a 6-pin mini connector for a VGA monitor. A VGA cable is attached to convert from a 6-pin mini connector to standard VGA connector. Pin assignments for the CRT display are detailed in Appendix A.

2.11 LED indicators

There are six LED on WEB-2040; four to indicate system status, one for power status, and one for CompactFlash™ status.

LED 1~4 (port address:310h)

LED	Function
PWRLED	Power LED
LED 1~4	Status LED
HDLED	CompactFlash™ /HDDLED

LED 1~4 (port address: 310h)

Bit	LED
3	LED 4
2	LED 3
1	LED 2
0	LED 1

CHAPTER 3

Award BIOS Setup

This chapter describes how to set the BIOS configuration data.

3.1 General information

Award BIOS ROM has a built-in setup program that allows users to modify the basic system configuration. This type of information is stored in battery-backed RAM so that it retains the setup information when the power is turned off.

3.2 Starting Award BIOS setup

As POST executes, the following appears:

```
Hit <DEL> if you want to run SETUP
Press <DEL> to run AWARDBIOS setup.
```

3.2.1 Award BIOS main menu

The Award BIOS setup screen appears as follows:

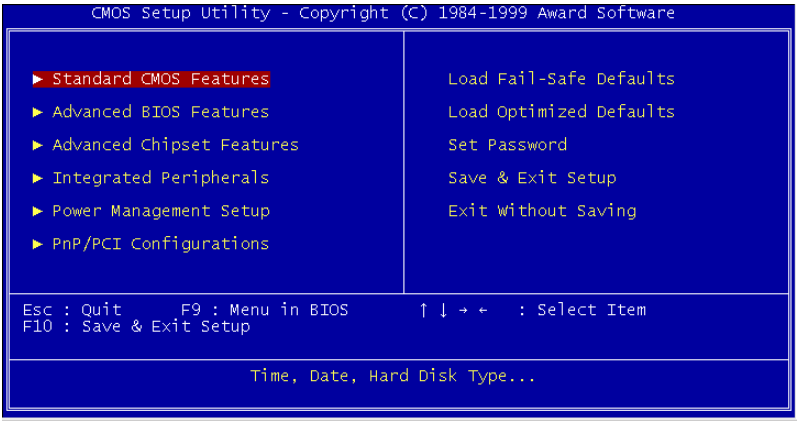

Figure 3-1: Main menu

3.3 Standard CMOS features

Choose the "Standard CMOS Features" option from the main menu, and the screen below will be displayed. This standard setup menu allows users to configure system components such as date, time, hard disk drive, floppy drive, display, and memory.

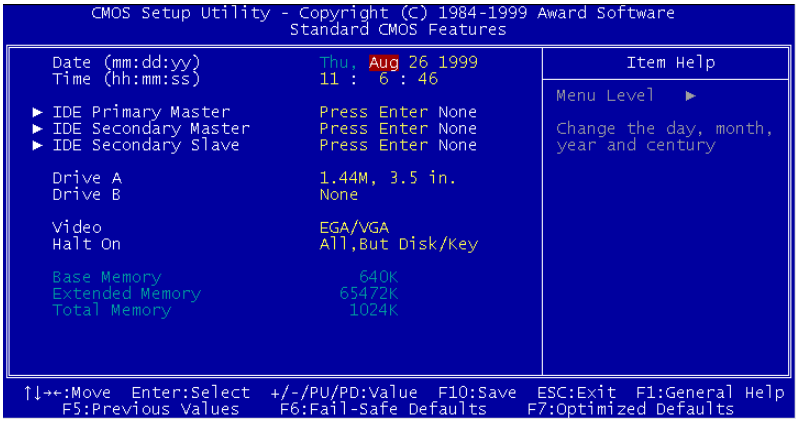

Figure 3-2: Standard CMOS setup screen

3.4 Advanced BIOS features

The screen below appears when choosing the "Advanced BIOS Features " item from the main menu. It allows the user to configure the WEB-2040 according to his particular requirements. Below are some major items that are provided in the Advanced BIOS FEATURES setup screen.

A quick booting function is provided for your convenience. Simply enable the Quick Power On Self Test item to save yourself valuable time.

```
        CMOS Setup Utility - Copyright (C) 1984-1999 Award Software
                          Advanced BIOS Features

   Virus Warning                Disabled          Item Help
   CPU Internal Cache           Enabled
   Quick Power On Self Test     Enabled     Menu Level  ►
   First Boot Device            HDD-0
   Second Boot Device           Floppy      Allows you to choose
   Third Boot Device            HDD-1       the VIRUS warning
   Boot Other Device            Enabled     feature for IDE Hard
   Boot Up Floppy Seek          Enabled     Disk boot sector
   Boot Up NumLock Status       On          protection. If this
   Boot Up System Speed         High        function is enabled
   Gate A20 Option              Normal      and someone attempt to
   Typematic Rate Setting       Disabled    write data into this
 x Typematic Rate (Chars/Sec)   6           area, BIOS will show a
 x Typematic Delay (Msec)       250         warning message on
   Security Option              Setup       screen and alarm beep
   OS Select For DRAM > 64MB    Non-OS2
   Video  BIOS Shadow           Enabled
   C8000-CBFFF Shadow           Disabled
   CC000-CFFFF Shadow           Disabled

 ↑↓→←:Move  Enter:Select  +/-/PU/PD:Value  F10:Save  ESC:Exit  F1:General Help
    F5:Previous Values    F6:Fail-Safe Defaults    F7:Optimized Defaults
```

Figure 3-3: BIOS features setup screen

3.4.1 Virus Warning

While the system is booting up, and after boot-up, any attempt to write to the boot sector or partition table of the hard disk drive will halt the system. In this case, a warning message will be displayed. You can run the anti-virus program to locate the problem.

If Virus Warning is disabled, no warning message will appear if anything attempts to access the boot sector or hard disk partition.

3.4.2 Quick Power On Self Test

This option speeds up the Power-On Self Test (POST) conducted as soon as the computer is turned on. When enabled, BIOS shortens or skips some of the items during the test. When disabled, the computer conducts normal POST procedures.

3.4.3 Boot Sequence

This function determines the sequence in which the computer will search the drives for the disk operating system (i.e. DOS). The user can define boot sequences from following devices:

Floppy

HDD-0

SCSI

CDROM

HDD-1

HDD-2

HDD-3

3.4.4 Boot Up Floppy Seek

During POST, BIOS will determine if the floppy disk drive installed is 40 or 80 tracks. A 360 KB type drive is 40 tracks; while 720 KB, 1.2 MB, and 1.44 MB type drives are all 80 tracks.

Enabled BIOS searches the floppy drive to determine if it is 40 or 80 tracks. Note that BIOS cannot differentiate 720 KB, 1.2 MB, and 1.44 MB type drives as they are all 80 tracks.

Disabled BIOS will not search for the floppy drive type by track number. Note that there will not be any warning message if the drive installed is 360 KB.

3.4.5 Boot Up NumLock Status

The default is On.

On Keypad boots up to number keys.

Off Keypad boots up to arrow keys.

3.4.6 Gate A20 Option

Normal The A20 signal is controlled by the keyboard controller or chipset hardware.

Fast (Default) The A20 signal is controlled by Port 92 or the chipset specific method.

3.4.7 Typematic Rate Setting

The typematic rate determines the characters per second accepted by the computer. The Typematic Rate setting enables or disables the typematic rate.

3.4.8 Typematic Rate (Chars/Sec)

BIOS fix the following input values (characters/second) for typematic rate: 6.

3.4.9 Typematic Delay (msec)

Typematic delay is the time interval between the appearance of the first and second characters, when holding down a key. The input value is: 250 (msec).

3.4.10 Security Option

This setting determines whether the system will boot up if the password is denied. Access to Setup is, however, always limited.

System The system will not boot, and access to Setup will be denied if the correct password is not entered at the prompt.

Setup The system will boot, but access to Setup will be denied if the correct password is not entered at the prompt.

3.4.11 OS Select for DRAM > 64 MB

This setting is under the OS/2 system.

3.4.12 Video BIOS Shadow

This determines whether video BIOS will be copied to RAM, which is optional according to the chipset design. When enabled, Video BIOS

Shadow increases the video speed.

3.4.13 C8000-CBFFF Shadow / CC000-CFFFF Shadow

These determine whether optional ROM will be copied to RAM in blocks of 16 KB.

Enabled	Optional shadow is enabled.
Disabled	Optional shadow is disabled.

3.5 Advanced chipset features

By choosing the "Advanced CHIPSET FEATURES" option from the Main menu, the screen below will be displayed.

This sample screen contains the manufacturer default values for the WEB-2040.

This section allows you to configure the system based on the specific features of the installed chipset. This chipset manages bus speeds and access to system memory resources, such as DRAM and the external cache. It also coordinates communications between the conventional ISA bus and the PCI bus. It must be stated that these items should never need to be altered. The default settings have been chosen, because they provide the best operating conditions for your system.

3.5.1 Video Memory Size

The Webcon-2000 adopts VGA share memory structure. Video memory size can be selected from 512 KB to 4096 KB. Onboard VGA video memory size should be zero, in order to release memory when the onboard VGA function is not used.

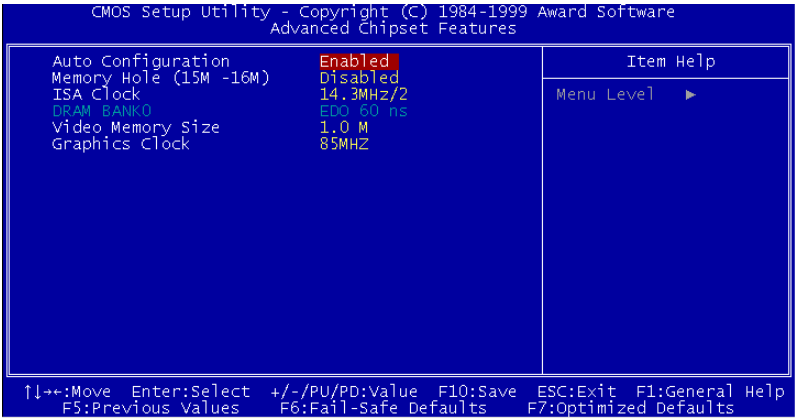

Figure 3-4: Chipset features setup screen

3.6 Integrated peripherals

```
CMOS Setup Utility - Copyright (C) 1984-1999 Award Software
                    Integrated Peripherals

On-Chip Local Bus IDE        Enabled          Item Help
IDE Buffer for DOS & Win     Enabled
The 2nd channel IDE          Enabled          Menu Level  ►
IDE Primary Master PIO       Auto
IDE Secondary Master PIO     Auto
IDE Secondary Slave  PIO     Auto
IDE HDD Block Mode           Enabled
KBC input clock              8 MHz
Onboard FDC Controller       Enabled
Onboard Serial Port 1        3F8/IRQ4
Onboard Serial Port 2        2F8/IRQ3
Onboard Parallel Port
Parallel Port Mode
ECP Mode Use DMA             3
EPP Mode Select              EPP1.9
WDT Active when Power ON     Disabled

↑↓→←:Move  Enter:Select  +/-/PU/PD:Value  F10:Save  ESC:Exit  F1:General Help
F5:Previous Values    F6:Fail-Safe Defaults    F7:Optimized Defaults
```

Figure 3-5: Integrated peripherals

3.6.1 Onboard FDC Controller

WEB-2040 doesn't support this function.

3.6.2 Onboard Serial Port 1/2

This option enables serial port 1/2 on the board and specifies the base I/O port address for serial port 1~2.

The settings are Disabled, 3F8h/IRQ4, 3E8h/IRQ4, 2E8h/IRQ3, and 2F8h/IRQ3.

3.6.3 Onboard Parallel Port

WEB-2040 doesn't support this function.

3.6.4 Parallel Port Mode

WEB-2040 doesn't support this function.

3.7 Power management setup

The power management setup controls the CPU card's "green" features. The following screen shows the manufacturer defaults.

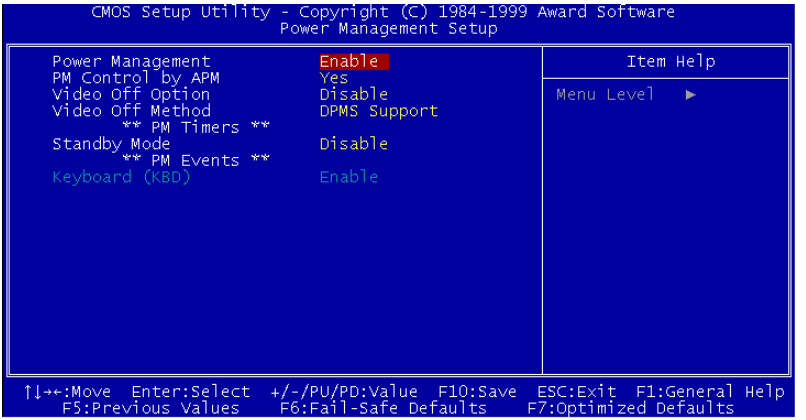

Figure 3-6: Power management setup screen

3.7.1 Power Management

Power management lets you set up your computer to save electricity when it is not actively in use by putting the system into progressively greater power saving modes. There are two selections for Power Management (Mode):

Disabled Turns off PM

Enabled Maximized power saving by activating maximum power saving settings after one minute of system inactivity.

When PM is set to Disabled, some items which are predefined will become unmodifiable.

Standby mode

This sets the period of system inactivity after which the system goes into Standby mode, the intermediate power saving state.

The settings range from 2 minutes to 16 minutes and can be set manually when power management is Enable. The default setting is Disabled. When the system goes into power saving mode, power management will skip to the next mode in the sequence if this is disabled.

3.8 PnP/PCI configuration setup

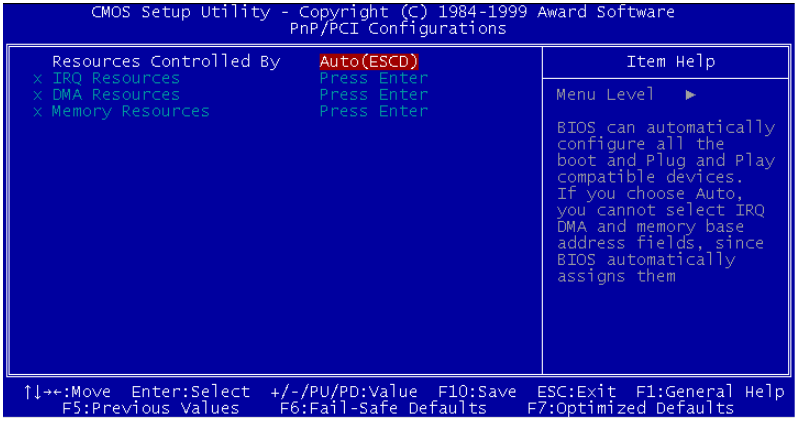

Figure 3-7: PCI configuration screen

3.8.1 Resources Control

When Resources Controlled by Auto(ESCD), BIOS can automatically configure all the boot and plug and play compatible devices. IRQ, DMA and Memory resources will become unmodifiable.

When Resources Controlled by Manual, IRQ, DMA and Memory resource can be set up manually.

3.8.2 IRQ resources

These fields indicate whether or not the displayed IRQ for each field is being used by a legacy (non-PnP card). Two options are available: PCI/ISA PnP or Legacy. The first option, the default setting, indicates that the displayed IRQ is not used to determine if an ISA card is using that IRQ. If you install a legacy ISA card that requires a unique IRQ, you must set the field for that IRQ to "Legacy". Say for example that you install a legacy ISA card that requires IRQ10. You must then set "IRQ10" assigned to "Legacy".

3.8.3 DMA resources

These fields indicate whether or not the displayed DMA for each field is being used by a legacy (non-PnP card). Two options are available: PCI/ISA PnP or Legacy. The first option, the default setting, indicates that the displayed IRQ is not used to determine if an ISA card is using that IRQ. If you install a legacy ISA card that requires a unique DMA, you must set the field for that IRQ to "Legacy".

3.8.4 Memory resources

Memory length can be reserved as 8 KB, 16 KB, 32 KB or 64 KB and its address can be selected from C8000 to DC000. Reserved memory address will not be modified when "Reserved Memory Base" is N/A.

3.9 Load fail-safe defaults

Load Fail-safe Defaults indicates the most appropriate values for the system parameters for stability. These default values are loaded automatically if the stored record created by the setup program becomes corrupted (and therefore unusable).

3.10 Load optimized defaults

"Load Optimized Defaults" loads the values required by the system for maximum performance.

3.11 Password setting

To change the password:

1. Choose the "SET PASSWORD" option from the main menu and press <Enter>.

The screen will display the following message:

Enter Password:

Press <Enter>.

2. If the CMOS is good or if this option has been used to change the default password, the user is asked for the password stored in the CMOS. The screen will display the following message:

Confirm Password:

Enter the current password and press <Enter>.

3. After pressing <Enter> (ROM password) or the current password (user-defined), you can change the password stored in the CMOS.

The password must be no longer than eight (8) characters.

Remember, to enable the password seeting feature, you must first select either SETUP or SYSTEM in "Security Option" item of "Advanced BIOS features".

3.12 Save & exit setup

If you select this and press <Enter>, the values entered in the setup utilities will be recorded in the CMOS memory of the chipset. The microprocessor will check this every time you turn your system on and compare this to what it finds as it checks the system. This record is required for the system to operate.

3.13 Exit without saving

Selecting this option and pressing <Enter> lets you exit the setup program without recording any new values or changing old ones.

CHAPTER 4

Software Configuration

This chapter details the software configuration information. It shows you how to configure the card to match your application requirements.

Sections include:

- Ethernet interface configuration

4.1 Ethernet software configuration

The WEB-2040 on-board Ethernet interface supports all major network operating systems. To configure the medium type, to view the current configuration, or to run diagnostics, do the following:

1. Power the WEB-2040 on. Ensure that the RSET8139.EXE file is located in the working drive.
2. At the prompt type RSET8139.EXE and press <Enter>. The Ethernet configuration program will then be displayed.
3. This simple screen shows all the available options for the Ethernet interface. Just highlight the option you wish to change by using the Up and Down keys. To change a selected item, press <Enter>, and a screen will appear with the available options. Highlight your option and press <Enter>. Each highlighted option has a helpful message guide displayed at the bottom of the screen for additional information.
4. After you have made your selections and are sure this is the configuration you want, press ESC. A prompt will appear asking if you want to save the configuration. Press Y if you want to save.

The Ethernet Setup Menu also offers three very useful diagnostic functions. These are:

1. Run EEPROM test
2. Run Diagnostics on Board
3. Run Diagnostics on Network

Each option has its own display screen that shows the format and result of any diagnostic tests undertaken.

APPENDIX A

Pin Assignments

- Floppy drive/parallel port connector
- CRT display connector
- IDE hard drive connector
- Keyboard and mouse connector
- COM1 RS-232 serial port
- COM2 RS-232 serial port
- Phoenix power connector

A.1 CRT display connector (JP4)

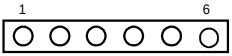

Table A-3: CRT display connector (JP4)

Pin	Signal
1	RED
2	H-SYNC
3	GREEN
4	V-SYNC
5	BLUE
6	GND

A.2 IDE hard drive connector (CN5)

Table A-4: IDE hard drive connector (CN5)

Pin	Signal	Pin	Signal
1	IDE RESET*	2	GND
3	DATA 7	4	DATA 8
5	DATA 6	6	DATA 9
7	DATA 5	8	DATA 10
9	DATA 4	10	DATA 11
11	DATA 3	12	DATA 12
13	DATA 2	14	DATA 13
15	DATA 1	16	DATA 14
17	DATA 0	18	DATA 15
19	SIGNAL GND	20	N/C
21	N/C	22	GND

23	IO WRITE	24	GND
25	IO READ	26	GND
27	IO CHANNEL READY	28	N/C
29	HDACKO*	30	GND
31	IRQ14	32	IOCS16
33	ADDR 1	34	N/C
35	ADDR 0	36	ADDR 2
37	HARD DISK SELECT 0*	38	HARD DISK SELECT 1*
39	IDE ACTIVE*	40	GND
41	VCC	42	VCC
43	GND	44	N/C

* low active

A.3 Keyboard and mouse connector (CN8)

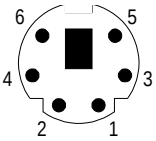

Table A-5: Keyboard and mouse connector (CN8)

Pin	Signal
1	KB DATA
2	MS DATA
3	GND
4	V_{CC}
5	KB CLOCK
6	MS CLOCK

A.4 COM1 RS-232 serial port (CN2)

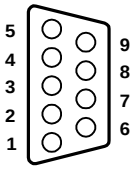

Table A-6: COM1 RS-232 serial port (CN10)

Pin	Signal
1	DCD
2	RXD
3	TXD
4	DTR
5	GND
6	DSR
7	RTS
8	CTS
9	RI

A.5 COM2 RS232 serial port (CN9)

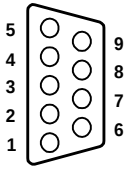

Table A-7: COM2 RS232 serial port (CN9)

Pin	Signal
1	DCD
2	RXD
3	TXD
4	DTR
5	GND
6	DSR
7	RTS
8	CTS
9	RI

A.6 COM3 RS485 serial port (CN1)

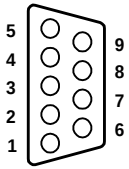

Table A-8: COM3 RS485 serial port (CN1)

Pin	Signal
1	TX+
2	TX-
3	N/C
4	N/C
5	GND
6	N/C
7	N/C
8	N/C
9	N/C

A.7 Phoenix power connector (CN15)

Table A-9: Phoenix power connector (CN15)

Pin	Signal
1	+24V
2	GND

A.8 Digital I/O connector (CN3)

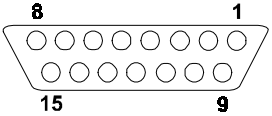

A-10: Digital I/O connector (CN3)

Pin	Signals	Pin	Signals
1	DI1	9	DO0
2	DI2	10	DO1
3	DI3	11	DO2
4	DI4	12	DO3
5	DI4	13	DO4
6	DI5	14	DO5
7	GND	15	GND
8	+5V		

APPENDIX B

System Assignments

This appendix contains information of a detailed or specialized nature. It includes:

- System I/O ports
- DMA channel assignments
- Interrupt assignments
- 1st MB memory map

B.1 System I/O ports

Table B-1: System I/O ports

Addr. range (Hex)	Device
000-01F	DMA controller
020-021	Interrupt controller 1, master
022-023	Chipset address
040-05F	8254 timer
060-06F	8042 (keyboard controller)
070-07F	Real-time clock, non-maskable interrupt (NMI) mask
080-09F	DMA page register,
0A0-0BF	Interrupt controller 2
0C0-0DF	DMA controller
0F0	Clear math co-processor
0F1	Reset math co-processor
0F8-0FF	Math co-processor
1F0-1F8	Fixed disk
200-207	Game I/O
278-27F	Parallel printer port 2 (LPT 3)
2F8-2FF	Serial port 2
300-31F	Prototype card
360-36F	Reserved
378-37F	Parallel printer port 1 (LPT 2)
380-38F	SDLC, bisynchronous 2
3A0-3AF	Bisynchronous 1
3B0-3BF	Monochrome display and printer adapter (LPT1)
3C0-3CF	Reserved
3D0-3DF	Color/graphics monitor adapter
3F0-3F7	Diskette controller
3F8-3FF	Serial port 1

B.2 DMA channel assignments

Table B-2: DMA channel assignments

Channel	Function
0	Available
1	Available
2	Floppy disk (8-bit transfer)
3	Available
4	Cascade for DMA controller 1
5	Available
6	Available
7	Available

B.3 Interrupt assignments

Table B-3: Interrupt assignments

Interrupt#	Interrupt source
IRQ 0	interval timer
IRQ 1	Keyboard
IRQ 2	Interrupt from controller 2 (cascade)
IRQ 8	Real-time clock
IRQ 12	PS/2 mouse (non-releasable)
IRQ 13	INT from co-processor
IRQ 14	Fixed disk controller (Primary)
IRQ 15	Fixed disk controller (Secondary)
IRQ 3	Serial communication port 2
IRQ 4	Serial communication port 1
IRQ 6	Diskette controller (FDC)
IRQ 7	Parallel port 1 (printer port)

Note: The Ethernet function is auto-sensing.

B.4 1st MB memory map

Table B-4: 1st MB memory map

Addr. range (Hex)	Device
F000h - FFFFh	System ROM
C800h - EFFFh	System ROM
C000h - C7FFh	Expansion ROM
B800h - BFFFh	CGA/EGA/VGA text
B000h - B7FFh	Unused
A000h - AFFFh	EGA/VGA graphics
0000h - 9FFFh	Base memory

APPENDIX C

Programming the Watchdog Timer

The Webcon 2040 is equipped with a watchdog timer that resets the CPU or generates an interrupt if processing comes to a standstill for any reason. This feature ensures system reliability in industrial standalone or unmanned environments.

C.1 Programming the watchdog timer

The default configuration of the timer is enabled with system reset.

To enable the watchdog timer, you must make a program which **writes 1 to I/O port address 443 (hex)** at regular intervals. The first time your program reads the port, it enables the watchdog timer. After that, your program must **write 1 to port 443** at time intervals of less than 1.6 seconds. Otherwise, the watchdog timer will activate and reset the CPU. When you want to disable the watchdog timer, your program should **write 0 to port 443**.

If CPU processing comes to a standstill because of EMI or a software problem, your program's signals to I/O port address 443 of the timer will be interrupted. The timer will then automatically reset the CPU, and data processing will continue normally.

You must make your program so that it **writes 1 to I/O port 443** at an interval shorter than the timer's preset interval. The timer's intervals have a tolerance of ± 30%, so you should program an instruction that will refresh the timer about every second.

The following example shows how you might program the watchdog timer in BASIC:

```
10      REM  Watchdog timer example program
20      X=Out &H443,1 REM  Enable and refresh the
        watchdog
30      GOSUB 1000 REM  Task #1, takes 1 second to
        complete
40      X=Out &H443,1 REM  Refresh the watchdog
50      GOSUB 2000 REM  Task #2, takes 1 second to
        complete
60      X=Out &H443,0 REM  Disable the watchdog
70      END
1000    REM  Subroutine #1, takes 1 second to complete
  .
  .
  .
1070    RETURN
2000    REM  Subroutine #2, takes 1 second to complete
  .
  .
  .
2090    RETURN
```