EMC UPDATE TEST REPORT

For

Advantech Co., Ltd.

Panel PC with Touch Screen

Model: PPC-S153X (X= T or M)

Trade Name: Advantech

Date of Test: February 03 ~ 04, 2004

Revision: 01

Description of Rev. 01

1. Applicant changes product name to Panel PC with Touch Screen.
   (Please refer to have ** mark items on this report)
2. Applicant adds one Power Adapter, one LCD Panel, one HDD and one CD-ROM to re-test.
   (Please refer to have ** mark items on this report)
3. Other information, please refer to the 030184 and this test report.

Approved by:

Kurt Chen
Director of Linkou Laboratory
Compliance Certification Services Inc.

Reviewed by:

Jessie Wang
Section Manager of Linkou Laboratory
Compliance Certification Services Inc.

Note: *This report shall not be reproduced except in full, without the written approval of Compliance Certification Services Inc. Ltd. This document may be altered or revised by Compliance Certification Services Inc. personnel only, and shall be noted in the revision section of the document.*

TABLE OF CONTENTS

1 TEST RESULT CERTIFICATION 3
2 EUT DESCRIPTION 4
3 TEST METHODOLOGY 6
3.1 DECISION OF FINAL TEST MODE 6
4 SETUP OF EQUIPMENT UNDER TEST 7
5 INSTRUMENT AND CALIBRATION 8
51 MEASURING INSTRUMENT CALIBRATION 8
5.2 TEST AND MEASUREMENT EQUIPMENT 8
6 TEST RESULTS 11
7 POWER HARMONICS TEST 16
8 POWER VOLTAGE FLUCTUATION / FLICKER TEST 18
9 ELECTROSTATIC DISCHARGE (ESD) IMMUNITY TEST 20
10 RADIATED ELECTROMAGNETIC FIELD IMMUNITY TEST 24
11 FAST TRANSIENTS/BURST IMMUNITY TEST 28
12 SURGE IMMUNITY TEST 30
13 CONDUCTED DISTRBANCE/INDUCED RADIO-FREQUENCY FIELD IMMUNITY TEST 32
14 POWER FREQUENCY MAGNETIC FIELD IMMUNITY TEST 34
15 VOLTAGE DIPS / SHORT INTERRUPTIONS 36
APPENDIX I - PHOTOGRAPHS OF TEST SETUP 38
APPENDIX II – TEST RESULT OF EN 61000-3-2/-3 47

1 TEST RESULT CERTIFICATION

Applicant:	**Advantech Co., Ltd.** No. 1, Alley 20, Lane 26, Rueiguang Road, Neihu District, Taipei 114, R.O.C.
Manufacturer:	**Advantech Co., Ltd.** No. 1, Alley 20, Lane 26, Rueiguang Road, Neihu District, Taipei 114, R.O.C.
Equipment Under Test:	Panel PC with Touch Screen
Trade Name:	Advantech
Model:	PPC-S153X (X= T or M)
Detailed EUT Description:	See Item 2 of this report
Date of Test:	February 03 ~ 04, 2004

Applicable Standard	Class/Limit/Criterion	Test Result
EN 55022: 1998	Class B	No non-compliance noted
EN 61000-3-2: 2000	Class D	Please refer to page 15
EN 61000-3-3: 1995 + A1: 2001	Limit	No non-compliance noted
EN 55024: 1998, including		
IEC 61000-4-2: 1995 + A2: 2000	Criterion B	No non-compliance noted
IEC 61000-4-3: 1995 + A2: 2000	Criterion A	No non-compliance noted
IEC 61000-4-4: 1995 + A1: 2000	Criterion B	No non-compliance noted
IEC 61000-4-5: 1995 + A1: 2000	Criterion B	No non-compliance noted
IEC 61000-4-6: 1996 + A1: 2000	Criterion A	No non-compliance noted
IEC 61000-4-8: 1993 + A1: 2000	Criterion A	No non-compliance noted
IEC 61000-4-11: 1994 + A1: 2000	Criterion B/C/C	No non-compliance noted
Deviation from Applicable Standard		
The conducted emission test item for telecom ports disturbance voltage (according to section 9.5 of EN 55022: 1998) is not tested in this report as per client's request.		

The above equipment was tested by Compliance Certification Services Inc. for compliance with the requirements set forth in the EMC Directive 89/336/EEC and the technical standards mentioned above. The results of testing in this report apply only to the product/system, which was tested. Other similar equipment will not necessarily produce the same results due to production tolerance and measurement uncertainties.

2 EUT DESCRIPTION

Product	Panel PC with Touch Screen		
Trade Name	Advantech		
Model	PPC-S153X (X= T or M)		
Housing Type	Plastic		
Power Adapter Manufacturer	Skynet	**Model**	SNP-PA59-M
**	LE	**Model**	LE-9702B-06
Power Adapter Power Rating	**For SNP-PA59-M** I/P: 100-250VAC, 47-63Hz, 1.5A O/P: 24VDC, 2.3A ****For LE-9702B-06** I/P: 100-240VAC, 50-60Hz, 1.8A O/P: 19VDC, 3.79A		
AC Power Cord Type	Unshielded, 1.8m (Detachable) to Power Adapter		
DC Power Cable Type	Unshielded, 1.8m (Non-detachable) at Power Adapter (For SNP-PA59-M) Unshielded, 1.8m (Non-detachable) at Power Adapter with a core (For LE-9702B-06)		
CPU Manufacture	Intel	**Type**	Celeron 850MHz
OSC/Clock Frequencies	100MHz		
Memory Capacity:		**Installed**	64MB
12.1” TFT LCD Panel Manufacturer	CPT	**Model**	CLAA150XG01
**	AU	**Model**	M150XN07
HDD Manufacturer:	Fujitsu	**Model**	**MHR2010AT (10GB)
			MHK2060AT (20GB)
FDD Manufacturer	NEC	**Model**	FD1238T
CD-ROM Manufacturer	QSI	**Model**	SCR-242
**	ASUS	**Model**	SCD-2400
Mother Board Manufacturer	Advantech	**Model:**	PCM-9670
LAN Card Manufacturer	On Board		
Printer Cable Type	Shielded, 0.2m (Detachable)		

I/O PORT OF EUT:

I/O PORT TYPES	Q'TY	TESTED WITH
1.) Parallel Port	1	1
2.) Serial Port	2	2
3.) PS/2 Keyboard/ Mouse Port	1	1
4.) Microphone Port	1	1
5.) Line-In Port	1	1
6.) Line-Out Port	1	1
7.) LAN Port	1	1
8.) USB Port	4	4

Note: *1. The means of suffix "X" (X= T or M) on model number is for marketing purpose only.*

2. Client consigns only one sample (Model Number：PPC-S153T) to test. Therefore, testing Lab. just guarantees the units, which have been tested.

3 TEST METHODOLOGY

3.1 DECISION OF FINAL TEST MODE

1. The following test mode(s) were scanned during the preliminary test:

   Mode 1
   1024 X 768 Resolution, 75Hz – 100Mbps

   Mode 2
   800 X 600 Resolution, 75Hz – 100Mbps

   Mode 3
   640 X 480 Resolution, 75Hz – 100Mbps

   Mode 4
   1024 X 768 Resolution, 75Hz – 10Mbps

2. After pre-scan, found mode 1 producing the highest emission level, used this mode for all final test.

4 SETUP OF EQUIPMENT UNDER TEST

Setup Diagram

See test photographs attached in Appendix 1 for the actual connections between EUT and support equipment.

Support Equipment

No.	Equipment	Model No.	Serial No.	FCC ID	Trade Name	Data Cable	Power Cord
1.	Modem	DM-1414	0304012268	IFAXDM1414	ACEEX	Shielded, 1.8m	Unshielded, 1.8m
2.	Printer	STYLUS C60	DR3K041511	FCC DoC	EPSON	Shielded, 1.8m	Unshielded, 1.8m
3.	PS/2 Keyboard (One to Two Adapter)	KB-0133	N/A	FCC DoC	Compaq	Shielded, 1.8m	N/A
4.	PS/2 Mouse (One to Two Adapter)	M-S69	N/A	FCC DoC	Compaq	Shielded, 1.8m	N/A
5.	Mouse	M-MM43	LZE94052791	FCC DoC	Logitech	Shielded, 1.8m	N/A
6.	USB Mouse	M-BB48	LZE92250259	FCC DoC	Logitech	Shielded, 1.8m	N/A
7.	USB Mouse	M-BB48	LZE93300460	FCC DoC	Logitech	Shielded, 1.8m	N/A
8.	USB Mouse	M-BB48	LZE92E50113	FCC DoC	Logitech	Shielded, 1.8m	N/A
9.	USB Mouse	M-BB48	LZE94150675	FCC DoC	Logitech	Shielded, 1.8m	N/A
10.	Earphone	GT-2004V	N/A	N/A	GITON	Unshielded, 1.8m	N/A
11.	Microphone	DM-510	N/A	N/A	KOKA	Unshielded, 1.8m	N/A
12.	Walkman	RQ-L10	HB004471	FCC DoC	Panasonic	Unshielded, 1.8m	N/A
13.	HUB (Remote)	TL-5008DS	XT942040616	N/A	Link Pro	LAN Cable: Unshielded, 20m	Unshielded, 1.8m
14.	Notebook PC (Remote)	M285	NU2503589	FCC DoC	LEO	LAN Cable: Unshielded, 1.2m	AC I/P: Unshielded, 1.8m DC O/P: Unshielded, 1.8m with a core

Note: *All the above equipment/cables were placed in worse case positions to maximize emission signals during emission test.*

Grounding: *Grounding was in accordance with the manufacturer's requirements and conditions for the intended use.*

5 INSTRUMENT AND CALIBRATION

51 MEASURING INSTRUMENT CALIBRATION

The measuring equipment utilized to perform the tests documented in this report has been calibrated once a year or in accordance with the manufacturer's recommendations, and is traceable to recognized national standards.

5.2 TEST AND MEASUREMENT EQUIPMENT

The following list contains measurement equipment used for testing. The equipment conforms to the requirement of CISPR 16-1, ANSI C63.2 and other required standards.

Calibration of all test and measurement, including any accessories that may effect such calibration, is checked frequently to ensure the accuracy. Adjustments are made and correction factors are applied in accordance with the instructions contained in the respective manual.

Equipment Used for Emission Measurement

Conducted Emission Test Site # 3				
Name of Equipment	**Manufacturer**	**Model**	**Serial Number**	**Calibration Due**
EMI Test Receiver	R&S	ESHS30	828144/003	08/07/2004
LISN	R&S	ESH2-Z5	843285/010	01/08/2005
LISN	EMCO	3825/2	9003-1628	07/27/2004

Note: *The measurement uncertainty is less than +/- 2.83dB, which is evaluated as per the NAMAS NIS 81 and CISPR/A/291/CDV.*

Open Area Test Site # 4				
Name of Equipment	**Manufacturer**	**Model**	**Serial Number**	**Calibration Due**
Spectrum Analyzer	ADVANTEST	R3132	91700456	N.C.R
EMI Test Receiver	R&S	ESVS10	846285/016	04/10/2004
Bilog Antenna	Sunol Sciences	JB1	A111203	01/09/2005
Turn Table	Chance most	N/A	N/A	N.C.R
Antenna Tower	Chance most	N/A	N/A	N.C.R
Controller	Chance most	N/A	N/A	N.C.R
RF Switch	ANRITSU	MP59B	M51067	N.C.R
Site NSA	C&C Lab.	N/A	N/A	08/08/2004

Note: *The measurement uncertainty is less than +/- 3.36dB, which is evaluated as per the NAMAS NIS 81 and CISPR/A/291/CDV.*

Power Harmonic & Voltage Fluctuation/Flicker Measurement (EN 61000-3-2&-3-3)				
Name of Equipment	**Manufacturer**	**Model**	**Serial Number**	**Calibration Due**
HARMONICS SYSTEM	EMC-PARTNER	HARMONICS-1 000	094	10/26/2004

Equipment Used for Immunity Measurement

ESD Test Site (IEC/EN 61000-4-2)				
Name of Equipment	**Manufacturer**	**Model**	**Serial Number**	**Calibration Due**
ESD Generator	EM TEST	P30C	0603-01	02/26/2004

Radiated Electromagnetic Field Immunity Test Site (IEC/EN 61000-4-3)				
Name of Equipment	**Manufacturer**	**Model**	**Serial Number**	**Calibration Due**
S.G.	R&S	SMY02	100094	08/05/2004
Power Meter	R&S	NRVD	837794/029	N.C.R.
Power Amplifier	ar	150W1000	300300	N.C.R
Power Antenna	EMCO	93141	9712-1083	N.C.R

Fast Transients/Burst Test Site (IEC/EN 61000-4-4)				
Name of Equipment	**Manufacturer**	**Model**	**Serial Number**	**Calibration Due**
Fast Transients/Burst Generator	HAEFELY TRENCH	PEFT- JUNIOR	583 333-117	08/19/2004
Clamp	HAEFELY TRENCH	093 506.1	080 421.13	N.C.R

Surge Immunity Test Site (IEC/EN 61000-4-5)				
Name of Equipment	**Manufacturer**	**Model**	**Serial Number**	**Calibration Due**
Surge Tester	HAEFELY TRENCH	PSUGER 4010	583 334-71	08/19/2004

CS Test Site (IEC/EN 61000-4-6)				
Name of Equipment	**Manufacturer**	**Model**	**Serial Number**	**Calibration Due**
S.G.	R&S	SMY02	100094	08/05/2004
Power Meter	R&S	NRVD	837794/029	N.C.R.
Power Amplifier	ar	500A100A	300299	N.C.R
CDN	Lüthi	801-M3	1879	02/25/2004
CDN	FRANKONIA	CDN-M2	A3002010	04/27/2004
CDN	SCHAFFNER	T400	16906	12/28/2004

Power Frequency Magnetic Field Immunity Test Site (IEC/EN 61000-4-8)				
Name of Equipment	**Manufacturer**	**Model**	**Serial Number**	**Calibration Due**
TRIAX ELF Magnetic Field Meter	F.W.BELL	4090	9711	11/13/2004
Clamp Meter	National	300K	11-5980 K	12/04/2004
Magnetic Field Tester	HAEFELY TRENCH	MAG 100.1	080 938-01	N.C.R

Voltage Dips/Short Interruption and Voltage Variation Immunity Test Site (IEC/EN 61000-4-11)				
Name of Equipment	**Manufacturer**	**Model**	**Serial Number**	**Calibration Due**
Dips/Interruption and Variations Simulator	HAEFELY TRENCH	PLINE 1610	080 344-05	03/27/2004

6 TEST RESULTS

Line Conducted Emission

Model: PPC-S153T **Test Mode:** Mode 1

Temperature: 18°C **Humidity:** 67% RH

Tested by: Michael Chen **Test Results:** Pass

(The chart below shows the highest readings taken from the final data)

Freq. (MHz)	Q.P. Raw (dBuV)	AVG Raw (dBuV)	Q.P. Limit (dBuV)	AVG Limit (dBuV)	Q.P. Margin (dB)	AVG Margin (dB)	NOTE
2.150	35.60	---	56.00	46.00	-20.40	---	L1
4.710	39.60	---	56.00	46.00	-16.40	---	L1
6.800	39.10	---	60.00	50.00	-20.90	---	L1
9.940	41.50	---	60.00	50.00	-18.50	---	L1
10.110	42.20	---	60.00	50.00	-17.80	---	L1
11.910	39.30	---	60.00	50.00	-20.70	---	L1
2.330	38.10	---	56.00	46.00	-17.90	---	L2
4.900	40.80	---	56.00	46.00	-15.20	---	L2
6.930	40.70	---	60.00	50.00	-19.30	---	L2
8.340	41.40	---	60.00	50.00	-18.60	---	L2
10.670	43.90	---	60.00	50.00	-16.10	---	L2
11.660	41.10	---	60.00	50.00	-18.90	---	L2

L1 = Line One (Live Line) / L2 = Line Two (Neutral Line)

Note: *"---" denotes the emission level was or more than 2dB below the Average limit, so no re-check anymore.*

Radiated Emission (A)

Model: PPC-S153T **Test Mode:** Mode 1

Temperature: 17°C **Humidity:** 68% RH

Detector Function: Quasi-peak. **Antenna:** Vertical at 10m

Tested by: Michael Chen **Test Results:** Pass

(The chart below shows the highest readings taken from the final data)

Freq. (MHz)	Raw Data (dBuV)	Corr. Factor (dB/m)	Emiss. Level (dBuV/m)	Limits (dBuV/m)	Margin (dB)
36.87	8.5	17.5	26.0	30.0	-4.0
67.28	15.9	9.5	25.4	30.0	-4.6
70.01	14.6	10.2	24.8	30.0	-5.2
74.01	15.5	9.8	25.3	30.0	-4.7
81.62	15.2	9.3	24.5	30.0	-5.5
108.53	11.7	13.7	25.4	30.0	-4.6
128.84	11.7	15.8	27.5	30.0	-2.5
130.71	10.7	15.9	26.6	30.0	-3.4
163.21	7.7	14.8	22.5	30.0	-7.5
173.19	8.3	14.4	22.7	30.0	-7.3
184.06	10.7	14.5	25.2	30.0	-4.8
200.11	12.0	16.0	28.0	30.0	-2.0
215.67	9.2	14.8	24.0	30.0	-6.0
229.24	10.1	14.4	24.5	30.0	-5.5
287.61	13.3	18.6	31.9	37.0	-5.1
363.78	10.8	19.7	30.5	37.0	-6.5
376.57	11.9	20.1	32.0	37.0	-5.0

401.76	12.3	21.0	33.3	37.0	-3.7
420.33	11.7	21.5	33.2	37.0	-3.8
439.59	10.5	22.1	32.6	37.0	-4.4
450.60	9.4	22.5	31.9	37.0	-5.1
470.08	10.5	23.0	33.5	37.0	-3.5
548.20	7.0	24.8	31.8	37.0	-5.2
600.23	7.7	24.8	32.5	37.0	-4.5

Radiated Emission (B)

Model: PPC-S153T **Test Mode:** Mode 1

Temperature: 17°C **Humidity:** 68% RH

Detector Function: Quasi-peak. **Antenna:** Horizontal at 10m

Tested by: Michael Chen **Test Results:** Pass

(The chart below shows the highest readings taken from the final data)

Freq. (MHz)	Raw Data (dBuV)	Corr. Factor (dB/m)	Emiss. Level (dBuV/m)	Limits (dBuV/m)	Margin (dB)
128.81	8.5	15.8	24.3	30.0	-5.7
134.03	7.4	15.9	23.3	30.0	-6.7
162.46	8.4	14.8	23.2	30.0	-6.8
173.91	10.1	14.4	24.5	30.0	-5.5
184.57	12.3	14.6	26.9	30.0	-3.1
201.06	12.1	15.9	28.0	30.0	-2.0
226.10	12.3	14.2	26.5	30.0	-3.5
250.72	14.8	15.7	30.5	37.0	-6.5
286.70	13.2	18.6	31.8	37.0	-5.2
299.81	13.9	18.7	32.6	37.0	-4.4
337.47	12.4	19.1	31.5	37.0	-5.5
351.61	13.8	19.3	33.1	37.0	-3.9
402.17	11.6	21.0	32.6	37.0	-4.4
422.24	12.4	21.6	34.0	37.0	-3.0
440.02	12.2	22.1	34.3	37.0	-2.7
451.37	9.0	22.5	31.5	37.0	-5.5
464.75	11.1	22.9	34.0	37.0	-3.0

534.29	9.6	24.6	34.2	37.0	-2.8
540.59	9.3	24.7	34.0	37.0	-3.0
551.71	9.1	24.9	34.0	37.0	-3.0
601.59	7.9	24.8	32.7	37.0	-4.3
639.23	7.8	25.9	33.7	37.0	-3.3
651.26	8.3	26.2	34.5	37.0	-2.5
701.51	6.5	27.3	33.8	37.0	-3.2
737.12	5.9	27.3	33.2	37.0	-3.8

7 POWER HARMONICS TEST

Port : AC mains
Basic Standard : EN 61000-3-2 (2000)
Limits : ☐ CLASS A ; ☐ CLASS B; ☐ CLASS C ; ☒ CLASS D
Tested by : Michael Chen
Temperature : 20°C
Humidity : 55% RH

Limit:

Limits for Class A equipment	
Harmonics Order n	Max. permissible harmonics current A
Odd harmonics	
3	2.30
5	1.14
7	0.77
9	0.40
11	0.33
13	0.21
15<=n<=39	0.15x15/n
Even harmonics	
2	1.08
4	0.43
6	0.30
8<=n<=40	0.23x8/n

Limits for Class D equipment		
Harmonics Order n	Max. permissible harmonics current per watt mA/W	Max. permissible harmonics current A
Odd Harmonics only		
3	3.4	2.30
5	1.9	1.14
7	1.0	0.77
9	0.5	0.40
11	0.35	0.33
13	0.30	0.21
15<=n<=39	3.85/n	0.15x15/n

Block Diagram of Test Setup:

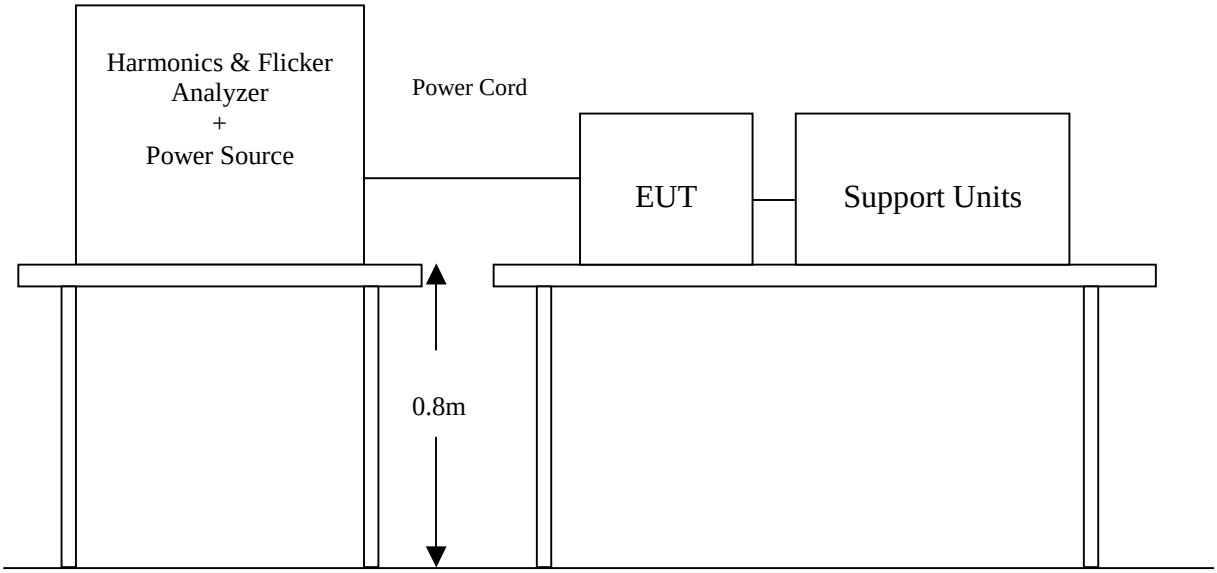

Test Procedure:

a. The EUT was placed on the top of a wooden table 0.8 meters above the ground and operated to produce the maximum harmonic components under normal operating conditions for each successive harmonic component in turn.

b. The correspondent test program of test instrument to measure the current harmonics emanated from EUT is chosen. The measure time shall be not less than the time necessary for the EUT to be exercised.

Test Result : (See Appendix II for details)

Note: *According to clause 7 of EN 61000-3-2: 2000, equipment with a rated power of 75W or less, no limits apply. The test result is only for reference.*

8 POWER VOLTAGE FLUCTUATION / FLICKER TEST

Port : AC mains
Basic Standard : EN 61000-3-3 (1995 + A1: 2001)
Limits : §5 of EN 61000-3-3
Tested by : Michael Chen
Temperature : 20°C
Humidity : 55% RH

Limit:

TEST ITEM	LIMIT	REMARK
P_{st}	1.0	P_{st} means short-term flicker indicator.
P_{lt}	0.65	P_{lt} means long-term flicker indicator.
T_{dt} (ms)	500	T_{dt} means maximum time that dt exceeds 3 %.
d_{max} (%)	4%	d_{max} means maximum relative voltage change.
dc (%)	3.3%	dc means relative steady-state voltage change

Block Diagram of Test Setup:

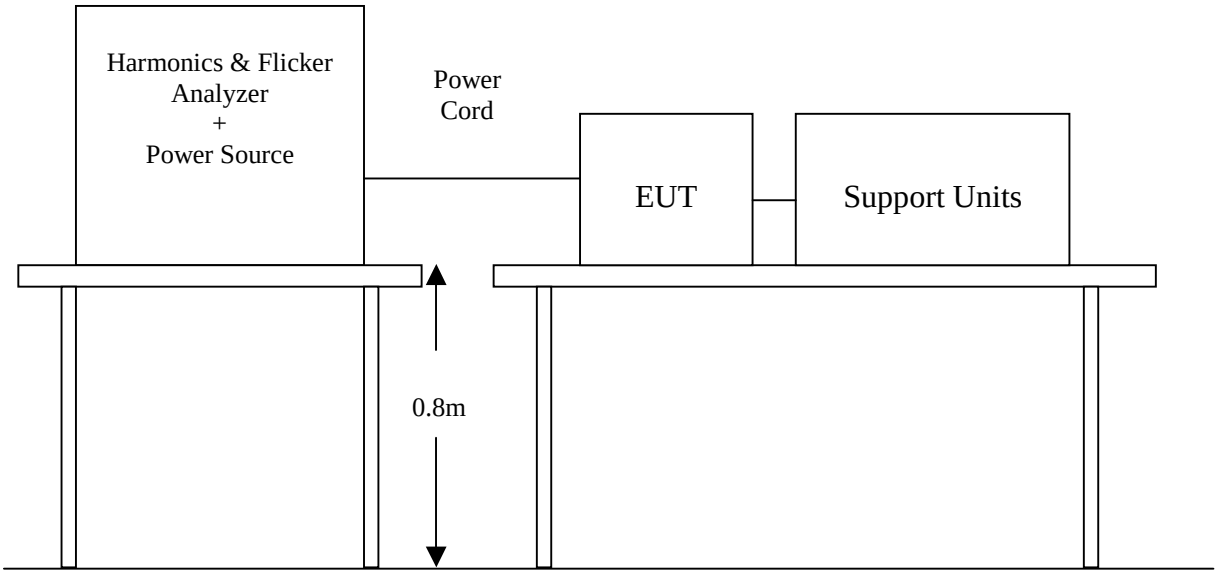

Test Procedure:

a. The EUT was placed on the top of a wooden table 0.8 meters above the ground and operated to produce the most unfavorable sequence of voltage changes under normal operating conditions.

b. During the flick measurement, the measure time shall include that part of whole operation cycle in which the EUT produce the most unfavorable sequence of voltage changes. The observation period for short-term flicker indicator is 10 minutes and the observation period for long-term flicker indicator is 2 hours.

Test Result: (See Appendix II for details)

** Continue

Test Parameter	Measurement Value	Limit	Result
P_{st}	0.072	1.0	Pass
P_{lt}	0.072	0.65	Pass
T_{dt} (ms)	0	500	Pass
d_{max} (%)	0%	4%	Pass
dc (%)	0.05%	3.3%	Pass

** Manual Switch

Test Parameter	Measurement Value	Limit	Result
P_{st}	0.072	1.0	Pass
P_{lt}	0.072	0.65	Pass
T_{dt} (ms)	0	500	Pass
d_{max} (%)	0.32%	4%	Pass
dc (%)	0.24%	3.3%	Pass

9 ELECTROSTATIC DISCHARGE (ESD) IMMUNITY TEST

Port	:	Enclosure
Basic Standard	:	IEC/EN 61000-4-2
Test Level	:	± 8 kV (Air Discharge)
		± 4 kV (Contact Discharge)
		± 4 kV (Indirect Discharge)
Performance Criterion	:	B (Standard Required)
Tested by	:	Michael Chen
Temperature	:	20°C
Humidity	:	50% RH
Pressure	:	1014mbar

Block Diagram of Test Setup:

(The 470 k ohm resistors are installed per standard requirement.)

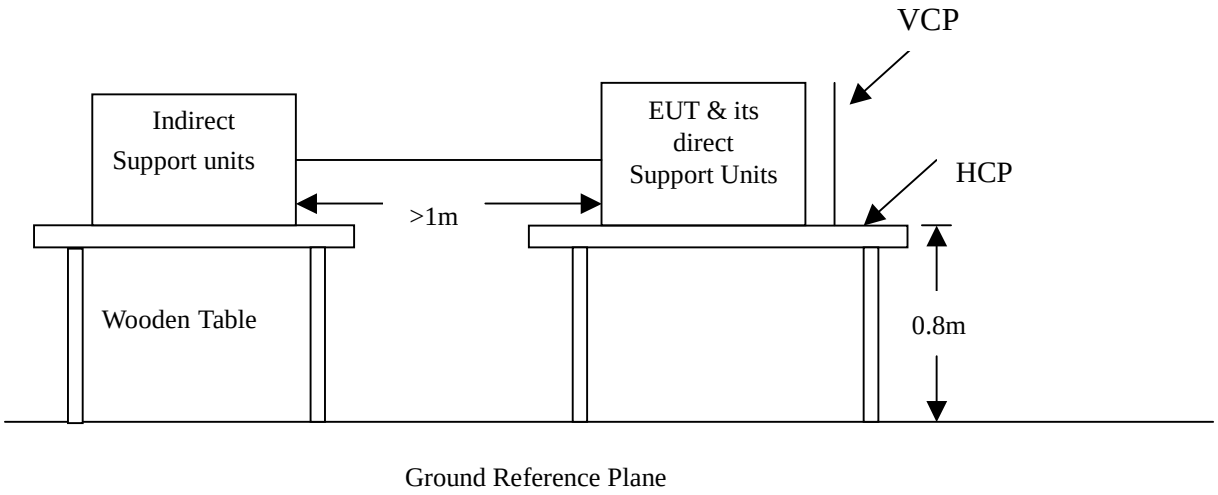

Test Procedure:

1. The EUT was located 0.1 m minimum from all side of the HCP.
2. The indirect support units were located 1 m minimum away from the EUT, but direct support unit was/were located at same location as EUT on the HCP and keep at a distance of 10 cm with EUT.
3. A scroll 'H' test program was loaded and executed in Windows XP mode.
4. The EUT sent above message to LCD Panel of Notebook PC at remote side and related peripherals through the test.
5. Active the communication function if the EUT with such port(s).
6. As per the requirement of EN 55024; applying direct contact discharge at the sides other than front of EUT at minimum 50 discharges (25 positive and 25 negative) if applicable, can't be applied direct contact discharge side of EUT then the indirect discharge shall be applied. One of the test points shall be subjected to at least 50 indirect discharge (contact) to the front edge of horizontal coupling plane.
7. Other parts of EUT where it is not possible to perform contact discharge then selecting appropriate points of EUT for air discharge, a minimum of 10 single air discharges shall be applied.
8. The application of ESD to the contact of open connectors is not required.
9. The EUT direct connection units also need to be applied ESD at the port of EUT cable connected.
10. Putting a mark on EUT to show tested points. The following test condition was followed during the tests.

Note: As per IEC/EN 61000-4-2, two 470k bleed resistors cable is connected between the EUT and HCP during the test applicable for power ungrounded or battery operating unit only.

The electrostatic discharges were applied as follows:

Amount of discharge	Voltage	Coupling	Result (Pass/Fail)
Mini 10 /Point	± 8 kV	Air Discharge	Pass
Mini 25 /Point	± 4 kV	Contact Discharge	Pass
Mini 25 /Point	± 4 kV	Indirect Discharge HCP	Pass
Mini 25 /Point	± 4 kV	Indirect Discharge VCP (Right)	Pass
Mini 25 /Point	± 4 kV	Indirect Discharge VCP (Left)	Pass
Mini 25 /Point	± 4 kV	Indirect Discharge VCP (Back)	N/A

*****For the tested points to EUT, please refer to attached page.***
(Blue arrow mark for Contact Discharge and red arrow mark for Air Discharge)

Performance & Result:

☒ **Criteria A:** The apparatus continues to operate as intended. No degradation of performance or loss of function is allowed below a performance level specified by the manufacturer, when the apparatus is used as intended. In some cases the performance level may be replaced by a permissible loss of performance.

☐ **Criteria B:** The apparatus continues to operate as intended after the test. No degradation of performance or loss of function is allowed below a performance level specified by the manufacturer, when the apparatus is used as intended. In some cases the performance level may be replaced by a permissible loss of performance. During the test, degradation of performance is however allowed.

☐ **Criteria C:** Temporary loss of function is allowed, provided the functions self recoverable or can be restored by the operation of controls.

☒ **PASS**	☐ **FAIL**
Observation: No function degraded during the tests.	

The Tested Points of EUT

Photo 1 of 4

Photo 2 of 4

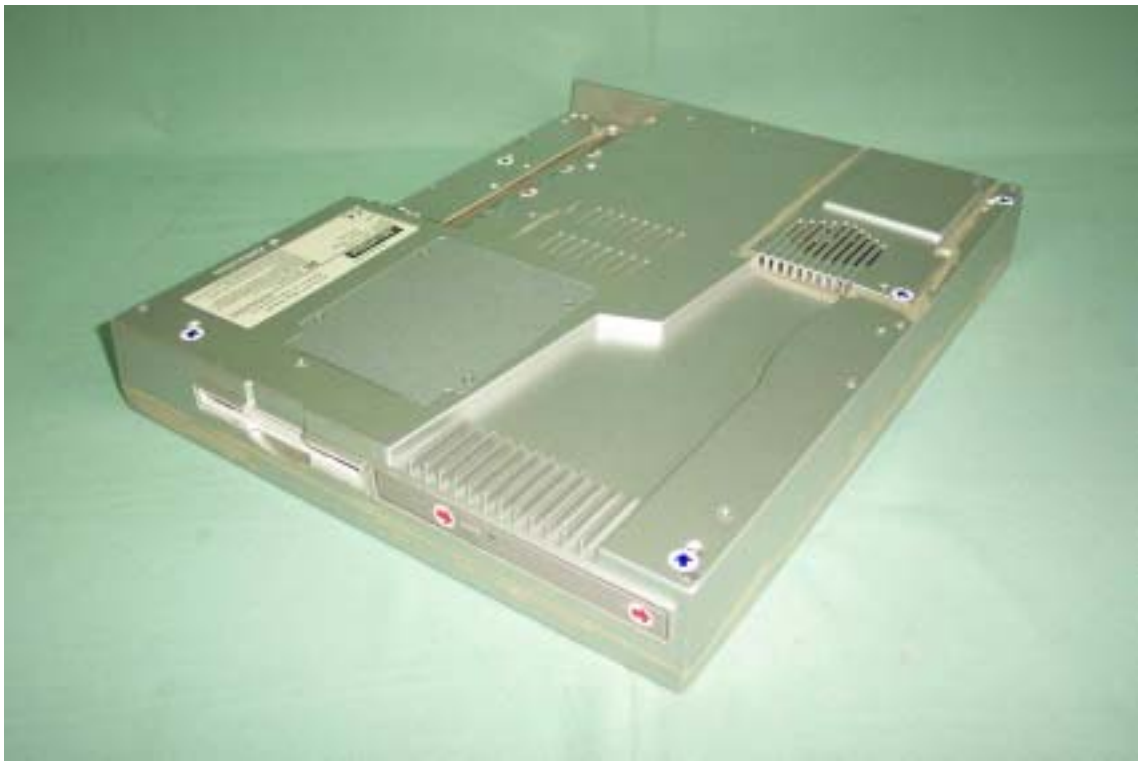

Photo 3 of 4

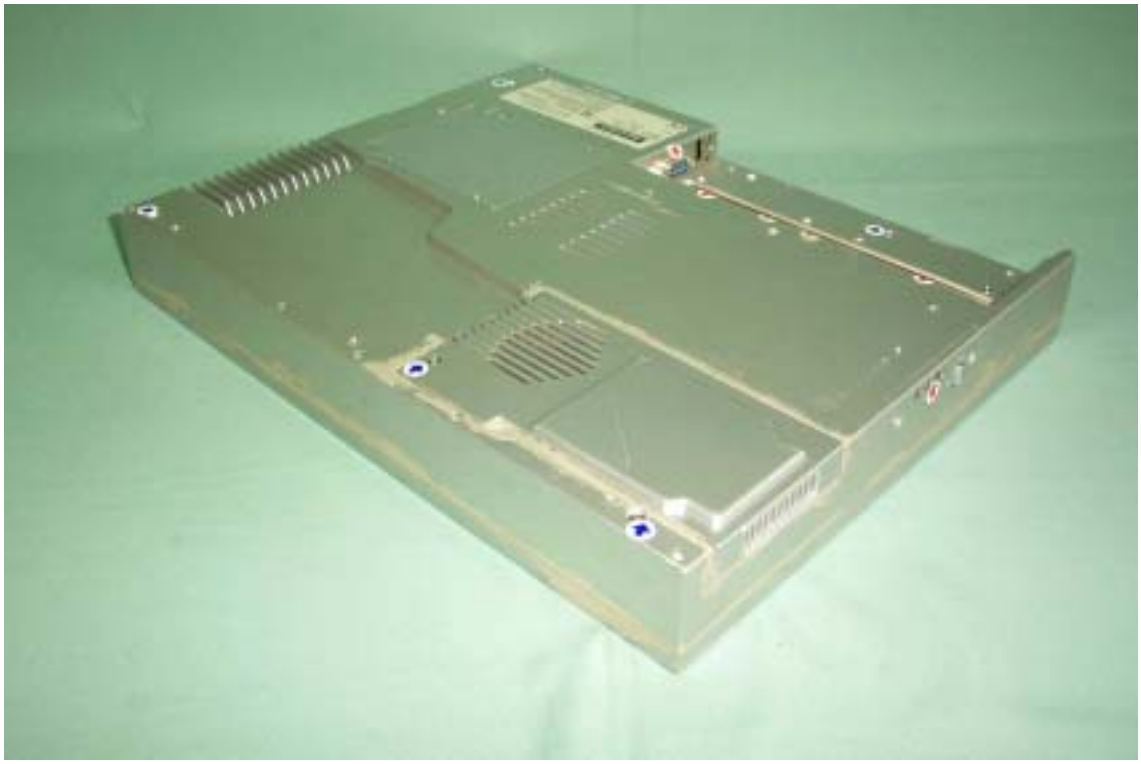

Photo 4 of 4

10 RADIATED ELECTROMAGNETIC FIELD IMMUNITY TEST

Port	:	Enclosure
Basic Standard	:	IEC/EN 61000-4-3
Requirements	:	3 V/m / with 80% AM. 1kHz Modulation.
Performance Criterion	:	A (Standard Required)
Tested by	:	Michael Chen
Temperature	:	17°C
Humidity	:	62% RH
Pressure	:	1016mbar

Block Diagram of Test Setup:

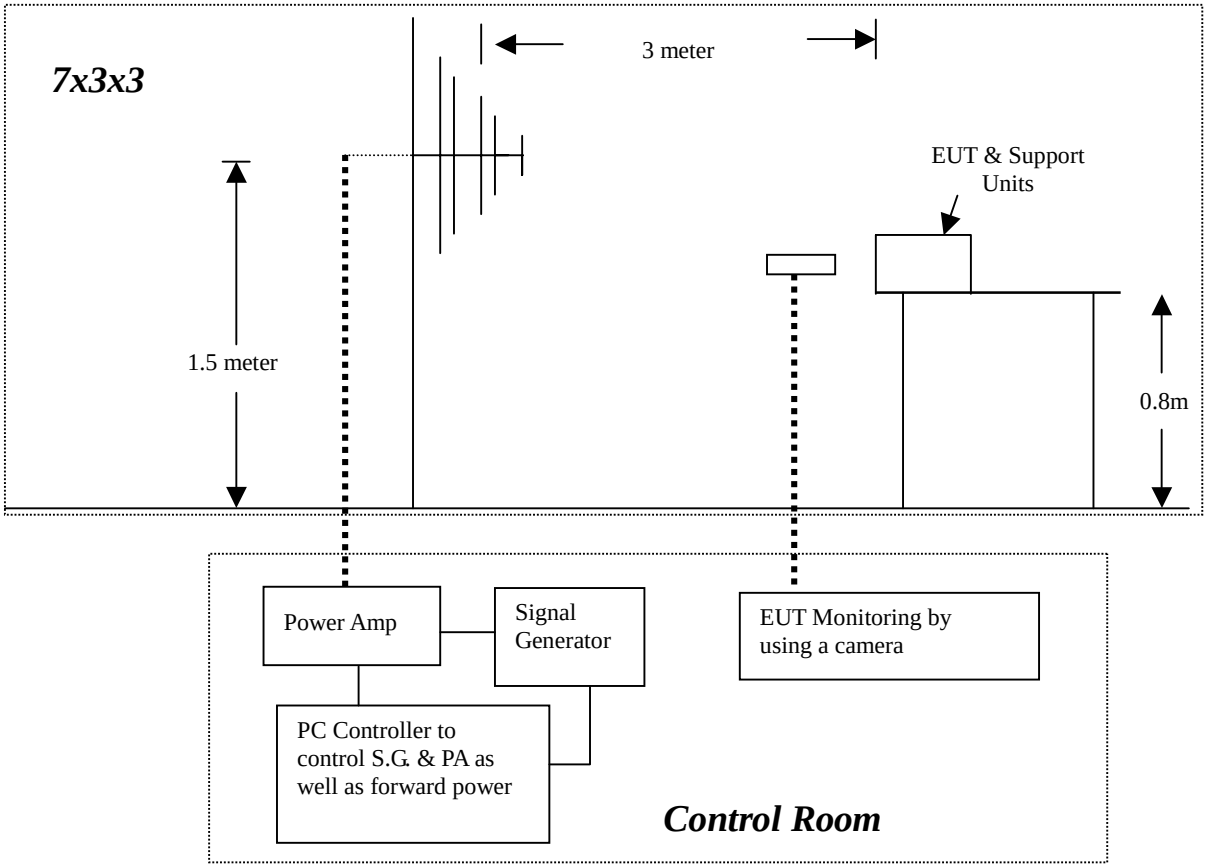

Test Procedure:

1. The EUT was located at the edge of supporting table keep 3 meter away from transmitting antenna, it just the calibrated square area of field uniformity. The support units were located outside of the uniformity area, but the cable(s) connected with EUT were exposed to the calibrated field as per IEC/EN 61000-4-3.
2. Setting the testing parameters of RS test software per IEC/EN 61000-4-3.
3. Performing the pre-test at each side of with double specified level (6V/m) at 4% steps.
4. From the result of pre-test in step 5, choice the worst side of EUT for final test from 80 MHz to 1000 MHz at 1% steps.
5. Recording the test result in following table.
6. It is not necessary to perform test as per annex A of EN 55024 if the EUT doesn't belong to ITE product.

Preliminary test conditions:

Test level : 6V/m
Steps : 4 % of fundamental
Dwell Time : 3 sec

Range (MHz)	Field	Modulation	Polarity	Position	Result (Pass/Fail)
80-1000	6V/m	Yes	H	Front	Pass
80-1000	6V/m	Yes	V	Front	Pass
80-1000	6V/m	Yes	H	Right	Pass
80-1000	6V/m	Yes	V	Right	Pass
80-1000	6V/m	Yes	H	Back	Pass
80-1000	6V/m	Yes	V	Back	Pass
80-1000	6V/m	Yes	H	Left	Pass
80-1000	6V/m	Yes	V	Left	Pass

Final test conditions:

Test level : 3V/m
Steps : 1 % of fundamental
Dwell Time : 3 sec

Range (MHz)	Field	Modulation	Polarity	Position	Result (Pass/Fail)
80-1000	3V/m	Yes	H	Front	Pass
80-1000	3V/m	Yes	V	Front	Pass

Performance & Result:

☒ **Criteria A:** The apparatus continues to operate as intended. No degradation of performance or loss of function is allowed below a performance level specified by the manufacturer, when the apparatus is used as intended. In some cases the performance level may be replaced by a permissible loss of performance.

☐ **Criteria B:** The apparatus continues to operate as intended after the test. No degradation of performance or loss of function is allowed below a performance level specified by the manufacturer, when the apparatus is used as intended. In some cases the performance level may be replaced by a permissible loss of performance. During the test, degradation of performance is however allowed.

☐ **Criteria C:** Temporary loss of function is allowed, provided the functions self recoverable or can be restored by the operation of controls.

☒ **PASS**	☐ **FAIL**
Observation: No function degraded during the tests.	

11 FAST TRANSIENTS/BURST IMMUNITY TEST

Port	:	On Power Supply Lines and LAN Cable
Basic Standard	:	IEC/EN 61000-4-4
Requirements	:	± 1 kV for Power Supply Line
		± 0.5kV for LAN Cable
Performance Criteria	:	B (Standard Required)
Tested by	:	Michael Chen
Temperature	:	19°C
Humidity	:	51% RH
Pressure	:	1014mbar

Block Diagram of Test Setup:

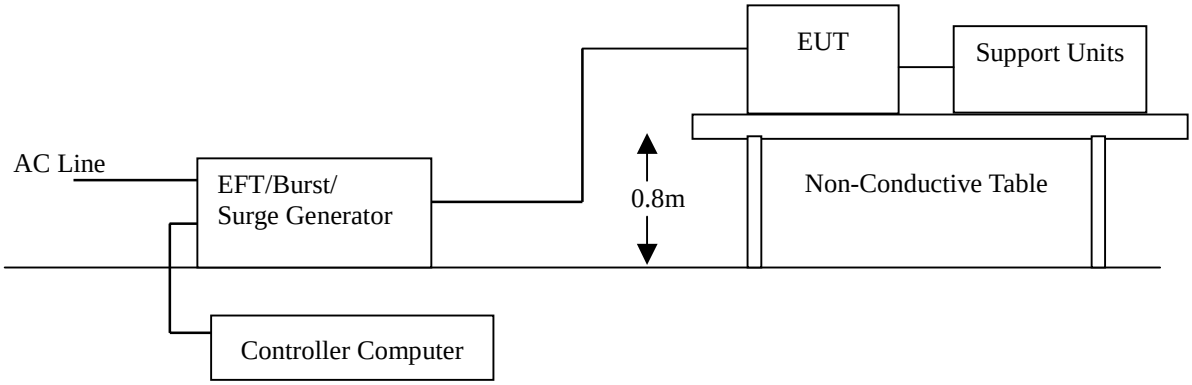

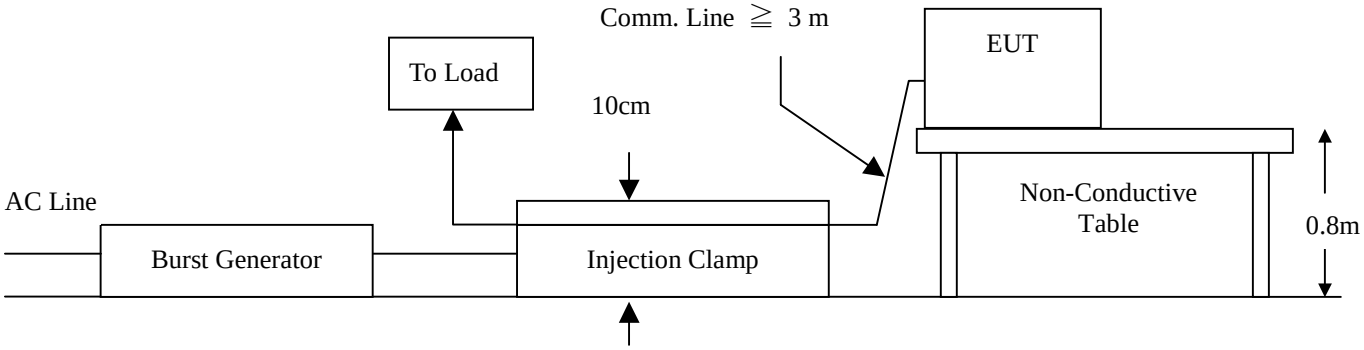

Test Procedure:

1. The EUT and support units were located on a wooden table 0.8 m away from ground reference plane.
2. A 1.0 meter long power cord was attached to EUT during the test.
3. The length of communication cable between communication port and clamp was keeping within 1 meter.
4. Injected test voltage to the EUT ports from minimum to standard request or client request.
5. Recording the test result as shown in following table.

Test conditions:

Impulse Frequency : 5kHz
Tr/Th : 5/50ns
Burst Duration : 15ms
Burst Period : 3Hz

Inject Line	Voltage kV	Inject Method	Result (Pass/Fail)
L	± 1	Direct	Pass
N	± 1	Direct	Pass
PE	± 1	Direct	Pass
L + N	± 1	Direct	Pass
L + PE	± 1	Direct	Pass
N + PE	± 1	Direct	Pass
L + N + PE	± 1	Direct	Pass
RJ 45 Port (LAN Cable)	± 0.5	Clamp	Pass

Performance & Result:

☒ **Criteria A:** The apparatus continues to operate as intended. No degradation of performance or loss of function is allowed below a performance level specified by the manufacturer, when the apparatus is used as intended. In some cases the performance level may be replaced by a permissible loss of performance.

☐ **Criteria B:** The apparatus continues to operate as intended after the test. No degradation of performance or loss of function is allowed below a performance level specified by the manufacturer, when the apparatus is used as intended. In some cases the performance level may be replaced by a permissible loss of performance. During the test, degradation of performance is however allowed.

☐ **Criteria C:** Temporary loss of function is allowed, provided the functions self recoverable or can be restored by the operation of controls.

☒ **PASS**	☐ **FAIL**
Observation: No function degraded during the tests.	

12 SURGE IMMUNITY TEST

Port	:	Power Cordb
Basic Standard	:	IEC/EN 61000-4-5
Requirements	:	± 1 kV (Line to Line)
		± 2 kV (Line to Ground)
Performance Criteria	:	B (Standard Required)
Tested by	:	Michael Chen
Temperature	:	19°C
Humidity	:	52% RH
Pressure	:	1014mbar

Block Diagram of Test Setup:

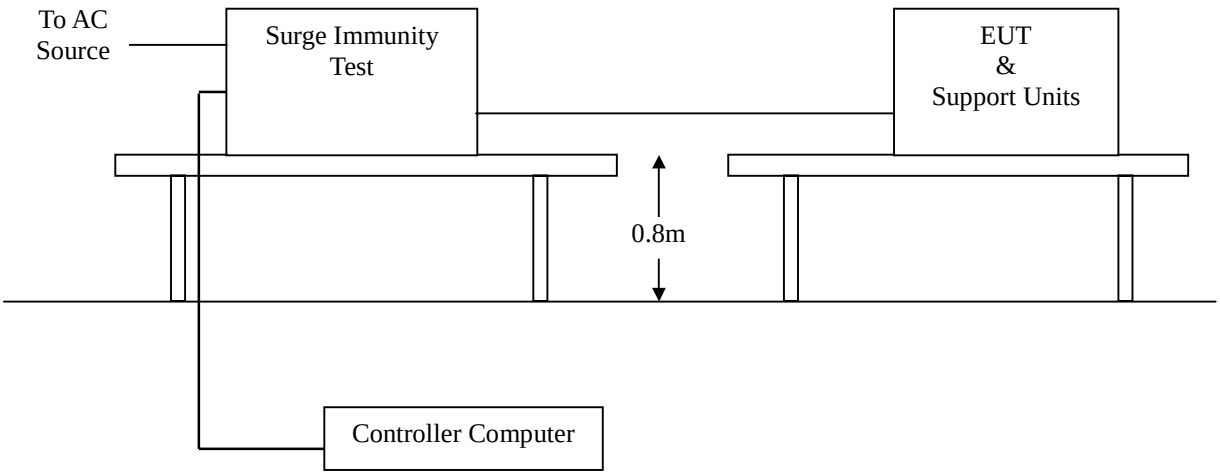

Test Procedure:

1. The EUT and support units were located on a wooden table 0.8 m away from ground floor.
2. Injected test voltage to the EUT ports from minimum to standard request or client request.
3. Recording the test result as shown in following table.

Test conditions:

Voltage Waveform : 1.2/50 *u*s
Current Waveform : 8/20 *u*s
Polarity : Positive/Negative
Phase angle : 0°, 90°, 270°
Number of Test : 5

Coupling Line	Voltage (kV)	Polarity	Coupling Method	Result (Pass/Fail)
L1-L2	1	Positive	Capacitive	Pass
L1-PE	2	Positive	Capacitive	Pass
L2-PE	2	Positive	Capacitive	Pass
L1-L2	1	Negative	Capacitive	Pass
L1-PE	2	Negative	Capacitive	Pass
L2-PE	2	Negative	Capacitive	Pass

Performance & Result:

☒ **Criteria A:** The apparatus continues to operate as intended. No degradation of performance or loss of function is allowed below a performance level specified by the manufacturer, when the apparatus is used as intended. In some cases the performance level may be replaced by a permissible loss of performance.

☐ **Criteria B:** The apparatus continues to operate as intended after the test. No degradation of performance or loss of function is allowed below a performance level specified by the manufacturer, when the apparatus is used as intended. In some cases the performance level may be replaced by a permissible loss of performance. During the test, degradation of performance is however allowed.

☐ **Criteria C:** Temporary loss of function is allowed, provided the functions self recoverable or can be restored by the operation of controls.

☒ **PASS** ☐ **FAIL**

Observation: No function degraded during the tests.

13 CONDUCTED DISTRBANCE/INDUCED RADIO-FREQUENCY FIELD IMMUNITY TEST

Port	:	AC Port and LAN Cable
Basic Standard	:	IEC/EN 61000-4-6
Requirements	:	3 V with 80% AM. 1kHz Modulation.
Injection Method	:	CDN-M3 for Power Cord
		CDN-T4 for LAN Cable
Performance Criterion	:	A (Standard Required)
Tested by	:	Michael Chen
Temperature	:	17°C
Humidity	:	62% RH
Pressure	:	1016mbar

Block Diagram of Test Setup:

Side View:

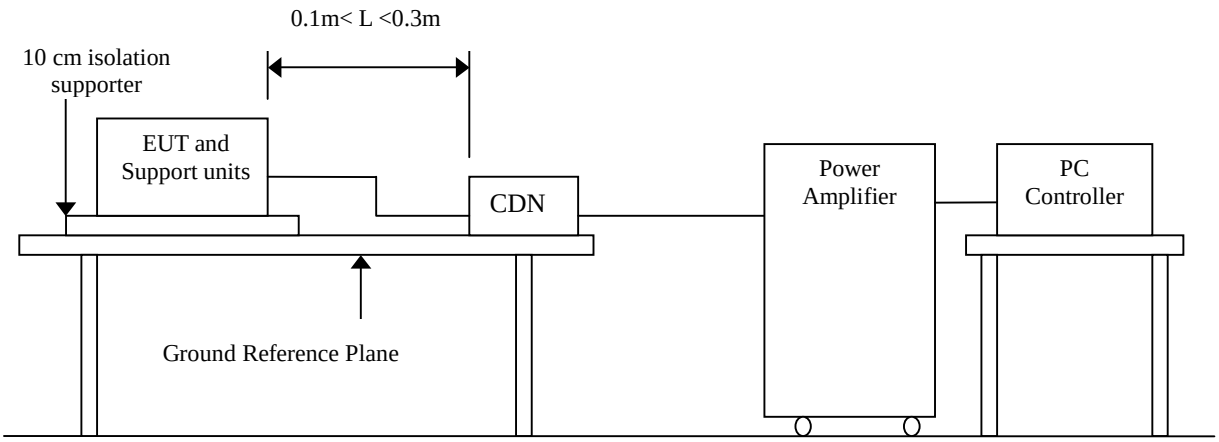

Top View:

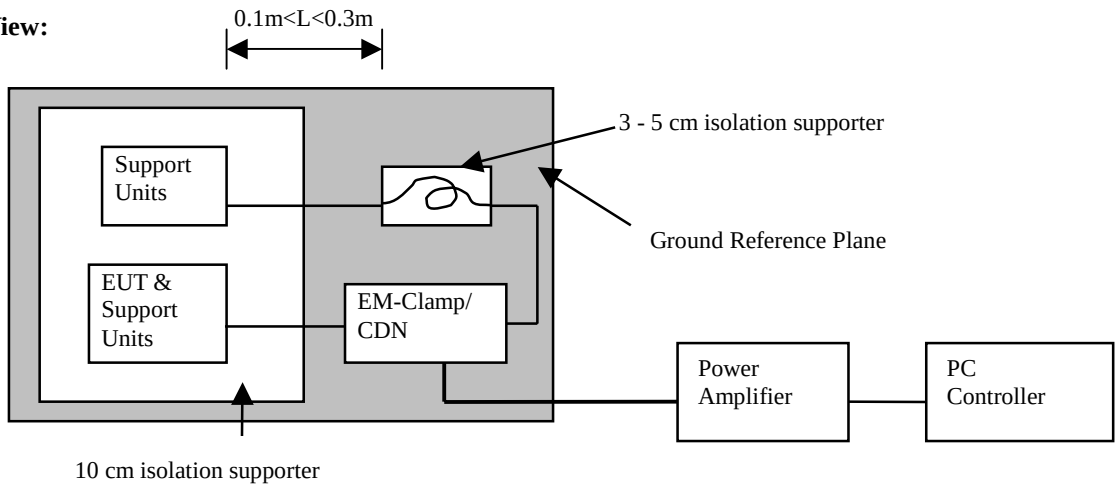

Test Procedure:

1. The EUT and support units were located at a ground reference plane with the interposition of a 0.1 m thickness insulating support and the CDN was located on GRP directly.
2. Setting the testing parameters of CS test software as per IEC/EN 61000-4-6.
3. Recording the test result in following table.

Test conditions:

Frequency Range : 0.15MHz-80MHz
Frequency Step : 1% of fundamental
Dwell Time : 3 sec

Range (MHz)	Field	Modulation	Result (Pass/Fail)
0.15-80	3V	Yes	Pass

Performance & Result:

☒ **Criteria A:** The apparatus continues to operate as intended. No degradation of performance or loss of function is allowed below a performance level specified by the manufacturer, when the apparatus is used as intended. In some cases the performance level may be replaced by a permissible loss of performance.

☐ **Criteria B:** The apparatus continues to operate as intended after the test. No degradation of performance or loss of function is allowed below a performance level specified by the manufacturer, when the apparatus is used as intended. In some cases the performance level may be replaced by a permissible loss of performance. During the test, degradation of performance is however allowed.

☐ **Criteria C:** Temporary loss of function is allowed, provided the functions self recoverable or can be restored by the operation of controls.

☒ **PASS** ☐ **FAIL**
Observation: No function degraded during the tests.

14 POWER FREQUENCY MAGNETIC FIELD IMMUNITY TEST

Port	:	Enclosure
Basic Standard	:	IEC/EN 61000-4-8
Requirements	:	1 A/m
Performance Criterion	:	A (Standard Required)
Tested by	:	Michael Chen
Temperature	:	18°C
Humidity	:	51% RH
Pressure	:	1014mbar

Block Diagram of Test Setup:

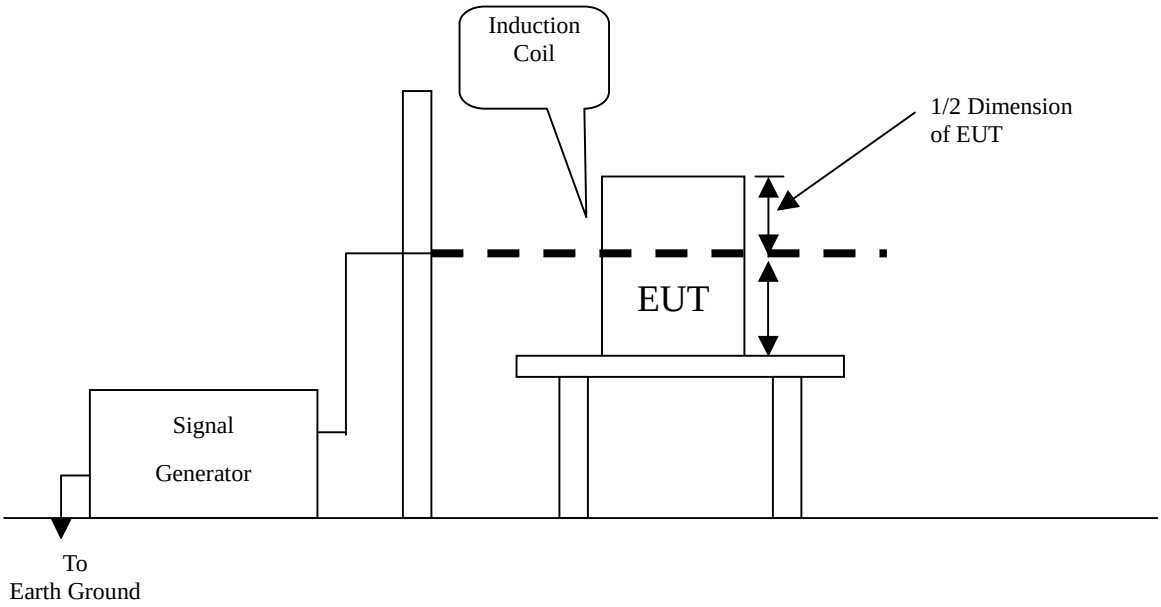

Test Procedure:

1. The EUT and support units were located on Ground Reference Plane with the interposition of a 0.1 m thickness insulation support.
2. Putting the induction coil on horizontal direction. (X direction)
3. Rotating the induction coil by 90° (Y direction)
4. Rotating the induction coil by 90° again (Z direction)
5. Recording the test result as shown in following table.

Test conditions:

Field Strength: 1A/m
Power Freq.: 50Hz
Orientation: X, Y, Z

Orientation	Field	Result (Pass/Fail)	Remark
X	1A/m	Pass	
Y	1A/m	Pass	
Z	1A/m	Pass	

Performance & Result:

☒ **Criteria A:** The apparatus continues to operate as intended. No degradation of performance or loss of function is allowed below a performance level specified by the manufacturer, when the apparatus is used as intended. In some cases the performance level may be replaced by a permissible loss of performance.

☐ **Criteria B:** The apparatus continues to operate as intended after the test. No degradation of performance or loss of function is allowed below a performance level specified by the manufacturer, when the apparatus is used as intended. In some cases the performance level may be replaced by a permissible loss of performance. During the test, degradation of performance is however allowed.

☐ **Criteria C:** Temporary loss of function is allowed, provided the functions self recoverable or can be restored by the operation of controls.

☒ **PASS** ☐ **FAIL**
Observation: No function degraded during the tests.

15 VOLTAGE DIPS / SHORT INTERRUPTIONS

Port : AC mains

Basic Standard : IEC/EN 61000-4-11

Requirement : PHASE ANGLE 0, 45, 90, 135, 180, 225, 270, 315 degrees

	Test Level % U_T	Reduction (%)	Duration (periods)	Performance Criteria
Voltage Dips	<5	>95	0.5	B
	70	30	25	C

	Test Level % U_T	Reduction (%)	Duration (periods)	Performance Criteria
Voltage Interceptions	<5	>95	250	C

Test Interval : Min. 10 sec.

Tested by : Michael CHen

Temperature : 18°C

Humidity : 51% RH

Pressure : 1014mbar

Block Diagram of Test Setup:

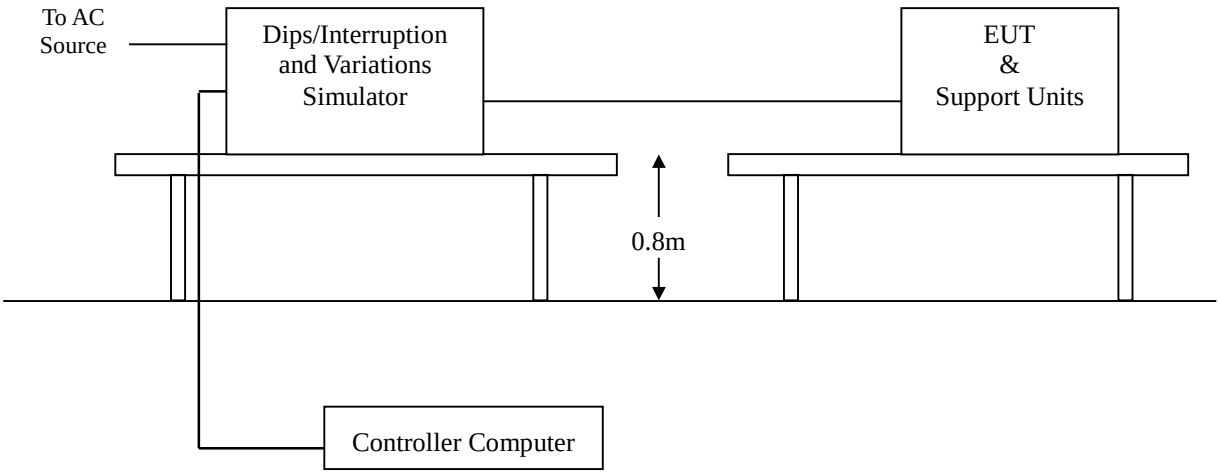

Test Procedure:

1. The EUT and support units were located on a wooden table, 0.8 m away from ground floor.
2. Setting the parameter of tests and then Perform the test software of test simulator.
3. Conditions changes to occur at 0 degree crossover point of the voltage waveform.
4. Recording the test result in test record form.

Test conditions

The duration with a sequence of three dips/interruptions with interval of 10 s minimum (Between each test event)

Voltage Dips:

Test Level % U_T	Reduction (%)	Duration (periods)	Observation	Meet Performance Criteria
0	100	0.5	Normal	A
70	30	25	Normal	A

Voltage Interruptions:

Test Level % U_T	Reduction (%)	Duration (periods)	Observation	Meet Performance Criteria
0	100	250	EUT shut down but can be recovered by manual, as the events disappear.	C

Normal: *No any functions degrade during and after the test.*

Performance & Result:

Criteria A: The apparatus continues to operate as intended. No degradation of performance or loss of function is allowed below a performance level specified by the manufacturer, when the apparatus is used as intended. In some cases the performance level may be replaced by a permissible loss of performance.

Criteria B: The apparatus continues to operate as intended after the test. No degradation of performance or loss of function is allowed below a performance level specified by the manufacturer, when the apparatus is used as intended. In some cases the performance level may be replaced by a permissible loss of performance. During the test, degradation of performance is however allowed.

Criteria C: Temporary loss of function is allowed, provided the functions self recoverable or can be restored by the operation of controls.

☒ **PASS** ☐ **FAIL**

APPENDIX I - PHOTOGRAPHS OF TEST SETUP

LINE CONDUCTED EMISSION TEST (EN 55022)

RADIATED EMISSION TEST (EN 55022)

POWER HARMONIC & VOLTAGE FLUCTUATION / FLICKER TEST

ELECTROSTATIC DISCHARGE TEST

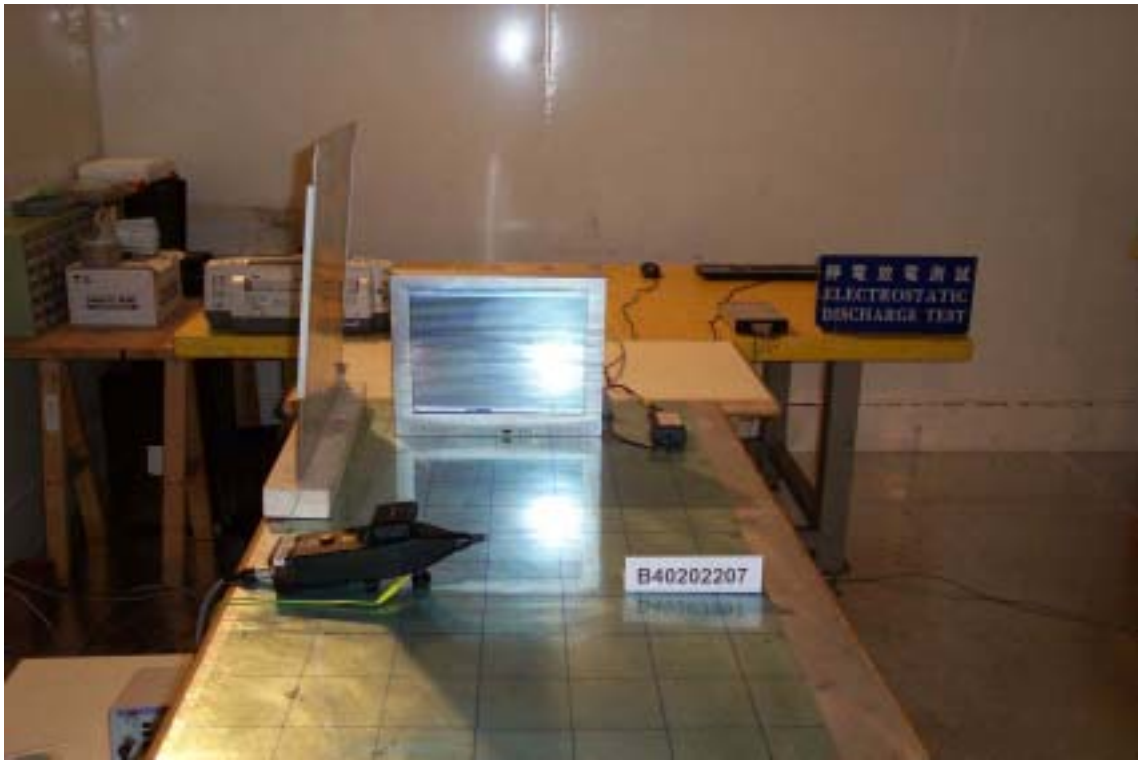

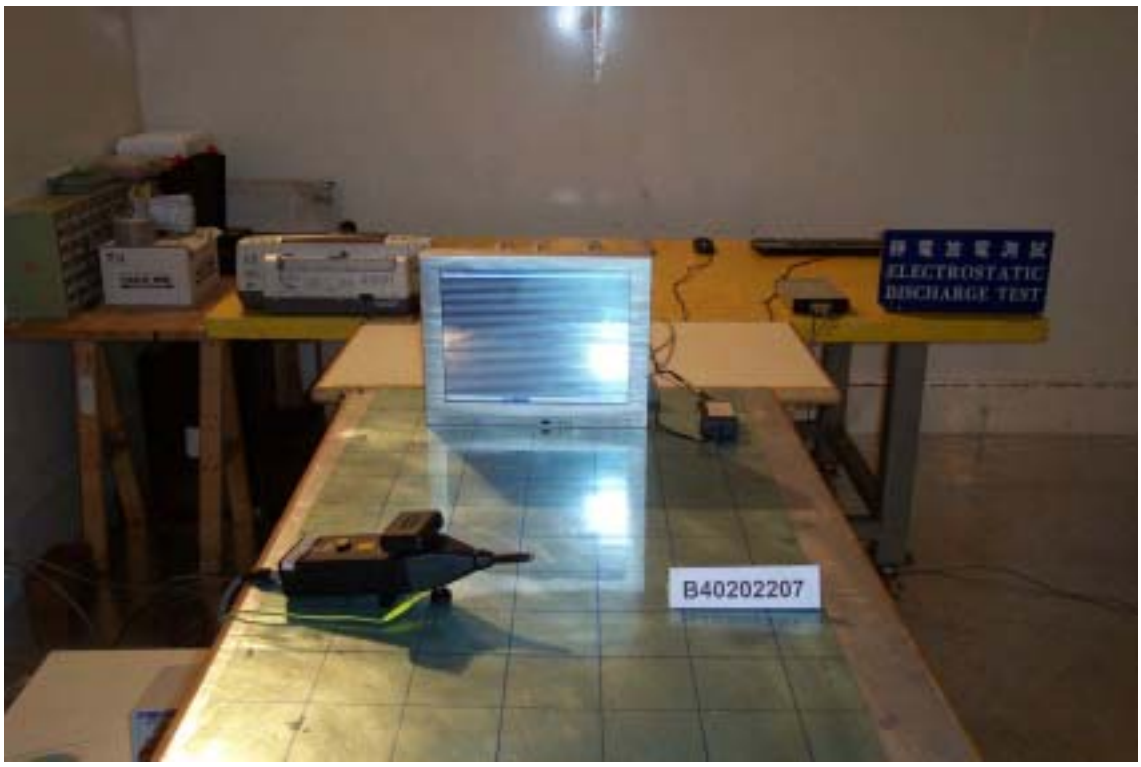

RADIATED ELECTROMAGNETIC FIELD TEST

FAST TRANSIENTS/BURST TEST

SURGE IMMUNITY TEST

CONDUCTED DISTURBANCE, INDUCED BY RADIO-FREQUENCY FIELDS TEST

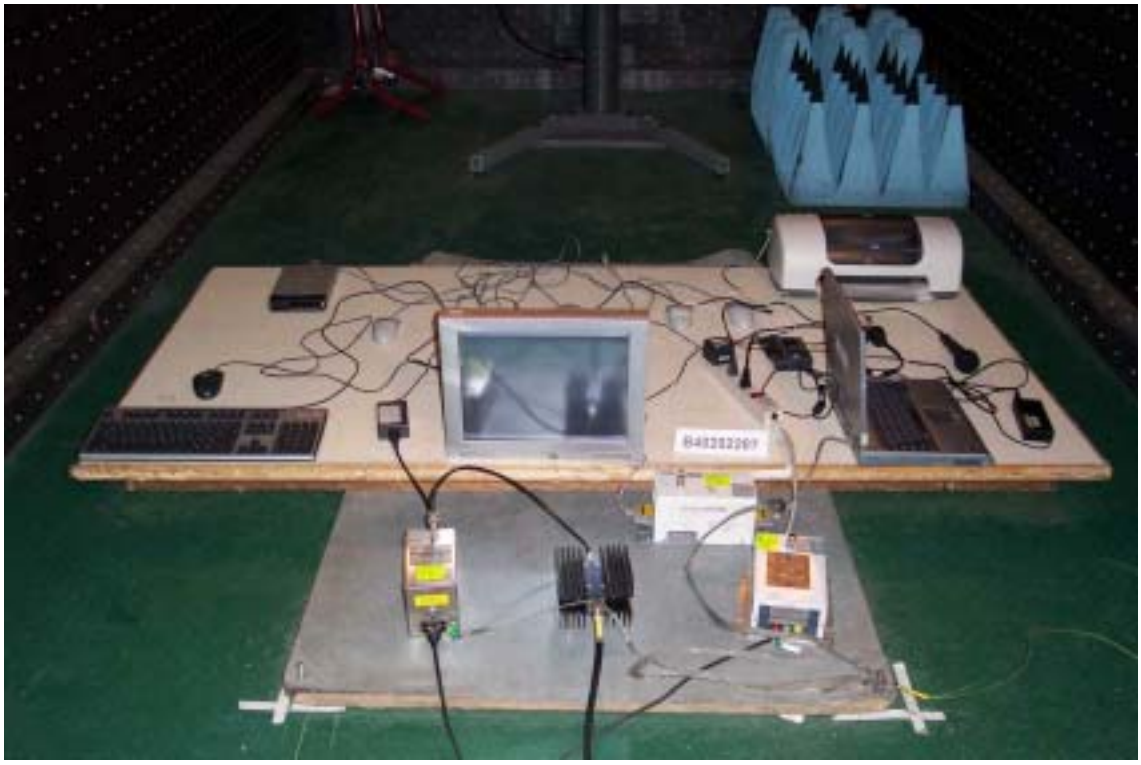

POWER FREQUENCY MAGNETIC FIELD IMMUNITY TEST

VOLTAGE DIPS / INTERRUPTION TEST

APPENDIX II – TEST RESULT OF EN 61000-3-2/-3

Harmonic Emission - IEC 61000-3-2 , EN 61000-3-2 , (EN60555-2)

Comply: IEC 61000-3-2 Ed.2.1 :2001 (incl. Amd.14) - IEC 61000-4-7 Ed.1.0 :1991

ADVANTECH

HARCS Setup File : unnamed
HARCS Report File : unnamed

Operator :	Michael Chen
EUT :	Panel PC with touch screen
Model No.	PPC-S153T
Remarks	TEMP:20 HUMD:55

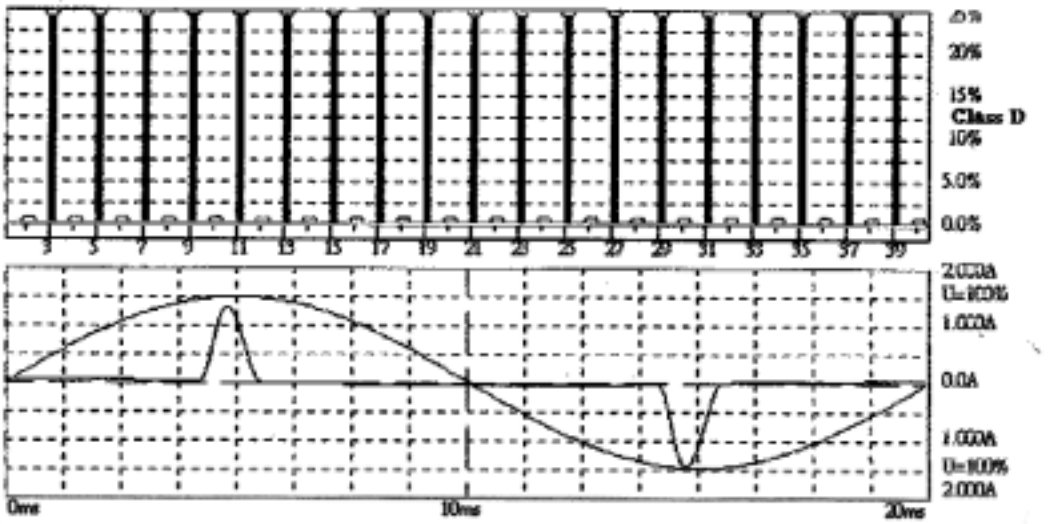

Harmonic Emission - IEC 61000-3-2 , EN 61000-3-2 , (EN60555-2) 2004/2/4 AM 10:42:19

Urms =	230.1	V	P =	31.41	W	THC =	0.289	A	Range:	2 A	
Irms =	0.313	A	pf =	0.435		Pmax =	33.11	W	V-nom:	230 V	
									TestTime:	5 min (100%)	

Panel PC with touch screen
TEMP:20 HUMD:55

Test completed, Result: FAILED

Full Bar : Actual Values
Empty Bar : Maximum Values
Blue : Current , Green : Voltage , Red : Failed

Measurement

ADVANTECH Date : 2004/2/4 AM 10:42:19 V3.15

File :

Operator :	Michael Chen
EUT :	Panel PC with touch screen
Model No.	PPC-S153T
Remarks	TEMP:20 HUMD:55

Urms =	230.1V	Freq =	49.987	Range:	2 A
Irms =	0.313A	Ipk =	1.480A	cf =	4.723
P =	31.41W	Pap =	72.13VA	pf =	0.435
THDi =	89.7 %	THDu =	0.10 %	Class D	

Test - Time : 5min (100 %)

Limit Reference: Pmax = 33.110W

Test completed, Result: FAILED

Order	Freq. [Hz]	Imax [A]	Imax% [%]	Imax%L [%]	Limit [A]	Status
1	50	1.4591	465.46			
2	100	0.0037	1.0392			
3	150	0.1332	42.484	118.30	0.1126	Fail
4	200	0.0036	1.7915			
5	250	0.1304	41.589	207.24	0.0629	Fail
6	300	0.0058	1.7144			
7	350	0.1206	38.474	364.26	0.0331	Fail
8	400	0.0051	1.6355			
9	450	0.1107	35.319	668.79	0.0166	Fail
10	500	0.0040	1.5576			
11	550	0.0975	31.114	841.65	0.0116	Fail
12	600	0.0040	1.4188			
13	650	0.0840	26.791	856.50	0.0098	Fail
14	700	0.0042	1.3240			
15	750	0.0696	22.196	818.77	0.0085	Fail
16	800	0.0039	1.2461			
17	850	0.0554	17.679	739.09	0.0075	Fail
18	900	0.0035	1.1289			
19	950	0.0422	13.474	629.54	0.0067	Fail
20	1000	0.0028	0.8924			
21	1050	0.0302	9.6184	496.72	0.0061	Fail
22	1100	0.0021	0.6735			
23	1150	0.0204	6.5031	367.82	0.0055	Fail
24	1200	0.0027	0.8567			
25	1250	0.0120	3.8162	234.62	0.0051	Fail
26	1300	0.0024	0.7788			
27	1350	0.0072	2.2975	152.55	0.0047	Fail
28	1400	0.0021	0.6620			
29	1450	0.0073	2.3364	166.63	0.0044	Fail
30	1500	0.0020	0.6231			
31	1550	0.0088	2.8037	213.74	0.0041	Fail
32	1600	0.0016	0.5062			
33	1650	0.0099	3.1542	255.97	0.0039	Fail
34	1700	0.0013	0.4283			
35	1750	0.0095	3.0374	261.43	0.0036	Fail
36	1800	0.0012	0.3894			
37	1850	0.0088	2.8037	255.11	0.0034	Fail
38	1900	0.0011	0.3505			
39	1950	0.0070	2.2196	212.88	0.0033	Fail
40	2000	0.0010	0.3115			

Important:
Pmax is below 75W. This seems not to be a class D equipment.

Calculation of Individual Harmonic Limits

For **Class D** the Limits are related to Pmax which is the Maximum Active Power consumption ot the EUT during the test time.

```
ADVANTECH                          Date : 2004/2/4 AM 10:57:23 V3.15

File :

Operator :                         Michael Chen
EUT :                              Panel PC with touch screen
Model No.                          PPC-S153T
Remarks                            TEMP:20 HUMD:55

Urms =  230.10  Freq =  49.987  Range:  2 A
Irms =  0.314A  Ipk  =  1.462A  cF    =  4.649
P    =  31.02W  Pap  =  72.36VA pF    =  0.429

Test - Time :   1 x 10min = 10min       ( 100 %)

LIN (Line Impedance Network) :  SLIN 0.24ohm +j0.15ohm N:0.16ohm +j0.10ohm

Limits :        Plt  :  0.65    Pst   : 1.00
                dmax :  4.00 %  dc    : 3.30 %
                dtLim:  3.30 %  dt>Lim: 500ms

Test completed, Result: PASSED

Plt  -  0.072

        Pst     dmax    dc      dt>Lim  Fail
                [%]     [%]     [ms]
1       0.072   0.000   0.050   0.000
```

```
ADVANTECH                          Date : 2004/2/4 PM 04:48:42 V3.15

File :

Operator :                         Michael Chen
EUT :                              Panel PC with touch screen
Model No.                          PPC-S153T
Remarks                            TEMP:20 HUMD:55 (MANUALSWITCH)

Urms =  230.1V  Freq =  49.987  Range:  2 A
Irms =  0.462A  Ipk  =  1.972A  cF   =  4.268
P    =  47.51W  Pap  =  106.3VA pF   =  0.447

Test - Time :   1 x 10min = 10min       ( 100 %)

LIN (Line Impedance Network) :  SLIN 0.24ohm +j0.15ohm N:0.16ohm +j0.10ohm

Limits :        Plt  :  0.65    Pst   : 1.00
                dmax :  4.00 %  dc    : 3.30 %
                dtLim:  3.30 %  dt>Lim: 500ms

Test completed, Result: PASSED

Plt  =  0.072

        Pst     dmax    dc      dt>Lim  Fail
                [%]     [%]     [ms]
1       0.072   0.320   0.240   0.000
```