IEC | IECEE CB SCHEME

**Ref. Certif. No.**

DE 2-005553

**IEC SYSTEM FOR MUTUAL RECOGNITION OF TEST CERTIFICATES FOR ELECTRICAL EQUIPMENT (IECEE) CB SCHEME**

**SYSTEME CEI D'ACCEPTATION MUTUELLE DE CERTIFICATS D'ESSAIS DES EQUIPEMENTS ELECTRIQUES (IECEE) METHODE OC**

# CB TEST CERTIFICATE
# CERTIFICAT D'ESSAI OC

| | |
|---|---|
| Product<br>Produit | LCD type Computer |
| Name and address of the applicant<br>Nom et adresse du demandeur | Advantech Co., Ltd. 4F, No. 108-3, Ming Chuan Road<br>Hsin Tien City<br>Taipei Hsien 231, Taiwan |
| Name and address of the manufacturer<br>Nom et adresse du fabricant | Advantech Co., Ltd. 4F, No. 108-3, Ming Chuan Road<br>Hsin Tien City<br>Taipei Hsien 231, Taiwan |
| Name and address of the factory<br>Nom et adresse de l'usine | Advantech Co., Ltd. Fl.5, No.1,Lane 169,<br>Kang-Ning St., Xi Zhi,<br>Taipei Hsien 221, Taiwan |
| Rating and principal characteristics<br>Valeurs nominales et caractéristiques principales | AC 100-250V; 50/60Hz; 3A; Class I |
| Trade mark (if any)<br>Marque de fabrique (si elle existe) | ADVANTECH |
| Model/type Ref.<br>Ref. de type | POC-173XX-AC-XX<br>(X = any alphanumeric character or blank for marketing purpose) |
| Additional information (if necessary)<br>Information complémentaire (si nécessaire) | For model differences refer to test report |
| A sample of the product was tested and found to be in conformity with<br>Un échantillon de ce produit a été essayé et a été considéré conforme à la | **PUBLICATION** **EDITION**<br>IEC 60601-1:1988+A1+A2<br>for national deviations see test report |
| As shown in the Test Report Ref. No.which forms part of this Certificate<br>Comme indiqué dans le Rapport d'essais numéro de référence qui constitue une partie de ce Certificat | 21104410 001 |

This CB Test Certificate is issued by the National Certification Body
Ce Certificat d'essai OC est établi par l'Organisme National de Certification

TÜV

**TÜV Rheinland Berlin Brandenburg**

TÜV Rheinland Product Safety GmbH
Am Grauen Stein · D-51105 Köln
Phone + 49 221 806-1371
Fax + 49 221 806-3935
Mail: trps-certification@de.tuv.com
Web: www.tuv.com

Date: 20.12.2002

Signature: Dipl.-Ing. F. Esdohr

TÜV Rheinland Product Safety GmbH TÜV Rheinland Zertifizierungsstelle

10/061 02.02

# TEST REPORT

## IEC 60601-1

## Medical electric equipment
## Part 1: General requirements for safety

**Report**

Reference No. ..... : <21104410 001>

Compiled by (+ signature) ..... : Dipl. Ing. Friedrich Stoelzel .....

Approved by (+ signature) ..... : Dipl. Ing. Ralf Knapp .....

Date of issue ..... : 17 Dec., 2002

Contents ..... : 49 pages

This report is based on a blank test report that was prepared by KEMA using information obtained from the TRF originator (see below).

**Testing laboratory**

Name..... : TÜV Rheinland Product Safety GmbH

Address ..... : Am Grauen Stein, Konstantin Wille Str.1, Cologne, Germany

Testing location..... : TÜV Rheinland Product Safety GmbH, Cologne, Germany

**Client**

Name..... : Advantech Co., Ltd.

Address ..... : 4F., No. 108-3, Ming Chuan Rd. Hsin Tien City, Taipei Hsien 231, Taiwan, R.O.C

**Test specification**

Standard ..... : IEC 60601-1: 1988 + A1:1991 + A2:1995
EN 60601-1 : 1990 + A1:1993 + A2:1995

Test procedure ..... : CB-Scheme

Procedure deviation ..... : Austria, Belgium, Brazil, Czech Republic, Finland, France, Germany, Greece, Hungary, Ireland, India, Italy, The Netherlands, Norway, Poland, Portugal, Russian Federation, Slovenia, Slovakia, Sweden, Switzerland, United Kingdom

Non-standard test method ..... : N.A.

**Test Report Form/blank test report**

Test Report Form No..... : I601-1_C/97-07

TRF originator. ..... : UL

Master TRF..... : Dated 97-04

Copyright reserved to the bodies participating in the Committee of Certification Bodies (CCB) and/or the bodies participating in the CENELEC Certification Agreement (CCA).

| | |
|---|---|
| **Test item** | |
| Description ..... : | LCD type computer |
| Trademark ..... : | ADVANTECH trademark |
| Model and/or type reference ..... : | POC-173XX-AC-XX<br>(Where the X can be any alphanumeric character or blank) |
| Manufacturer ..... : | Same as client |
| Factory ..... : | Advantech Co., Ltd.<br>Fl.5, No.1, Lane 169, Kang- Ning Street, Xi-Zhi, Taipei Hsien 221, Taiwan, R.O.C. |
| Rating(s) ..... : | I/P: 100-250Va.c., 50/60 Hz, 3A |
| **Particulars: test item vs. test requirements** | |
| Classification of installation and use..... : | Transportable equipment |
| Supply connection..... : | Appliance inlet |
| **Test case verdicts** | |
| Test case does not apply to the test object..... : | N(.A.) |
| Test item does meet the requirement ..... : | P(ass) |
| Test item does not meet the requirement..... : | F(ail) |
| ..... : | |
| **Testing** | |
| Date of receipt of test item ..... : | Oct. 2002 |
| Date(s) of performance of test ..... : | Nov. 2002 |
| ..... : | |

**General remarks**

This test report shall not be reproduced except in full without the written approval of the testing laboratory.

The test results presented in this report relate only to the item tested.

"(see remark #)" refers to a remark appended to the report.

"(see appended table)" refers to a table appended to the report.

Throughout this report a point is used as the decimal separator.

**Brief description of the test sample:**

- The equipment model POC-173XX-AC-XX (X can be any alphanumeric character or blank for marketing purpose, not safety relevant) is a LCD type computer for general use in medical environment, with a class I building-in type switching power supply inside.

  The switching power supply mentioned above is an approved product, which was evaluated according to IEC 60601-1: 1988+A1+A2 by TUV Rheinland and CB Scheme approved (by Nemko), see appended table 56 for detail information.

  The test sample was pre-production without serial number.

- The LCD type computer has passed the requirements of EMI/EMC regulation according to EN / IEC60601-1-2.

- Maximum specified ambient temperature is 40°C.

- Two USB ports provided, the testing is following with the LPS (Limited power source) as specified in IEC60950:

  - Uoc=4.47V (measured under no load conditions for the USB output "+" to "-")
    with max.load conditions
    Measured current: 1.70A≤ 8.0A
    Measured power=6.0VA ≤ 22.4VA

  - Uoc=4.49V
    with L47 shorted
    Measured current: 2.0A ≤ 8.0A
    Measured power=7.0VA ≤ 22.4VA

- Attachment: Circuit Diagram: Page 47 to Page 49.

Copy of marking plate

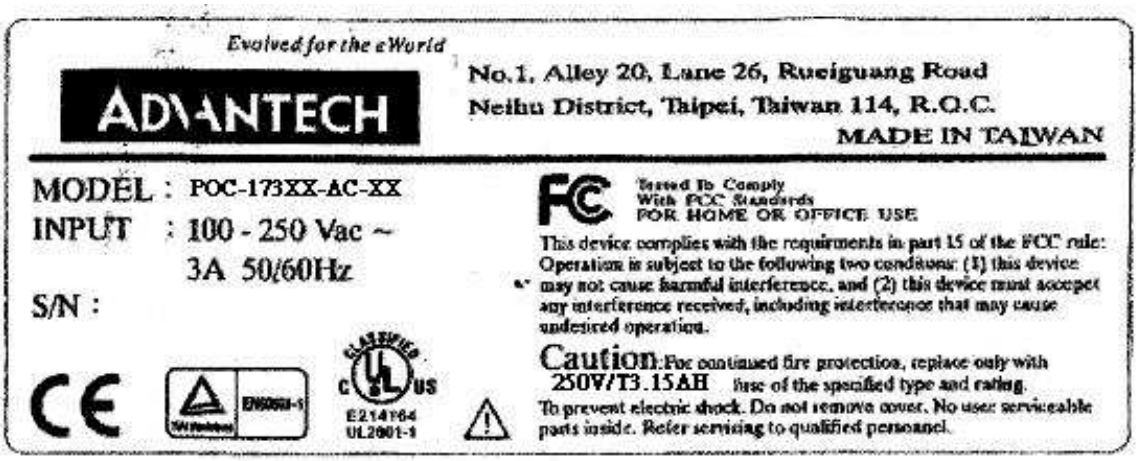

| IEC 60601-1 | | | |
|---|---|---|---|
| Clause | Requirement – Test | Result – Remark | Verdict |

| | | | |
|---|---|---|---|
| 3. | GENERAL REQUIREMENTS | | P |
| 3.1 | Equipment when transported, stored, installed, operated in normal use and maintained according to the instructions of the manufacturer, causes no safety hazard which could reasonably be foreseen and which is not connected with its intended application in normal condition (N.C.) and in single fault condition (S.F.C.) | | P |
| 3.4 | An alternative means of construction is used to that detailed in this standard and it can be demonstrated that an equivalent degree of safety is obtained | | N |

| | | | |
|---|---|---|---|
| 5. | CLASSIFICATION | | P |
| 5.1 | Type of protection against electric shock | | P |
| | Class I equipment | Class I equipment | P |
| | Class II equipment | ditto | N |
| | Internally powered equipment | ditto | N |
| 5.2 | Degree of protection against electric shock | No applied part. | N |
| | Type B applied part | Ditto | N |
| | Type BF applied part | Ditto | N |
| | Type CF applied part | Ditto | N |
| | Not classified, no applied parts | Ditto | P |
| 5.3 | Classification according to the degree of protection against ingress of water as detailed in the current edition of IEC 60529 (see 6.1.1) ....: | Ordinary protection: IPX0 | P |
| 5.4 | Methods of sterilization or disinfection | No sterilization or disinfection requirement. | N |
| 5.5 | Equipment not suitable for use in the presence of flammable mixtures | Not AP or APG category equipment. | N |
| | Category AP equipment | ditto | N |
| | Category APG equipment | ditto | N |
| 5.6 | Mode of operation: | | P |
| | continuous operation | Designed for continuous operation. | P |
| | short-time operation, specified operation; period : | Ditto | N |

| IEC 60601-1 | | | |
|---|---|---|---|
| Clause | Requirement – Test | Result – Remark | Verdict |

| | | | |
|---|---|---|---|
| | intermittent operation, specified operation; rest period .....: | Ditto | N |
| | continuous operation with short-time, stated permissible loading time .....: | Ditto | N |
| | continuous operation with intermittent, stated permissible loading/rest time .....: | Ditto | N |
| | Table: insulation diagram | | — |
| | Protection against electric shock - Block diagram of system | | — |

INSULATION DIAGRAM

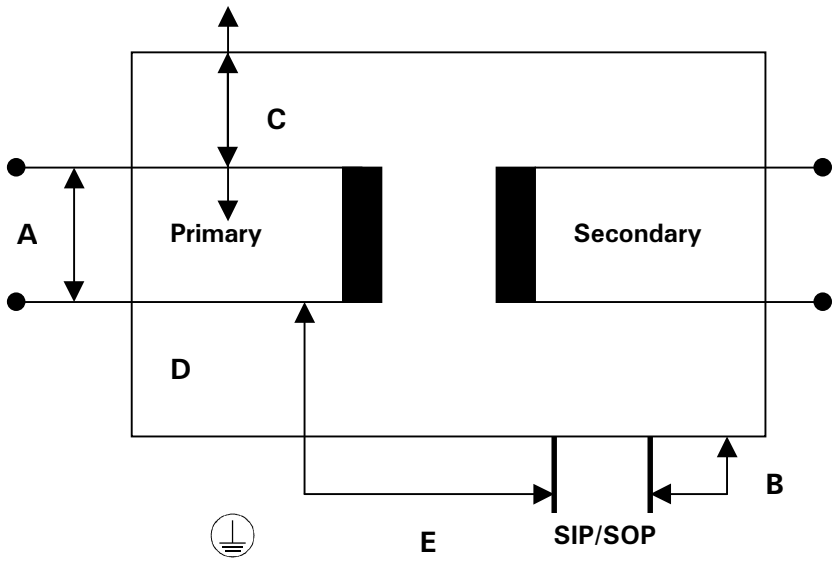


| | | | | | | | |
|---|---|---|---|---|---|---|---|
| | Table: to insulation diagram | | | | | | P |
| area | insulation type: operational/basic/ supplementary/ double/reinforced | reference voltage (V) | Required creepage (mm) | required clearance (mm) | measured creepage (mm) | Measured clearance (mm) | Remarks |
| A | A-f<br>Basic insulation | ≤250 | 3 | 1.6 | 4.6 | 4.6 | 1500Va.c. |
| B | A-k<br>(SIP/SOP to plastic enclosure) double/ reinforced insulation | ≤250 | 8 | 5 | 12.4 | 7.0 | 4000Va.c. |

| IEC 60601-1 | | | |
|---|---|---|---|
| Clause | Requirement – Test | Result – Remark | Verdict |

| | | | | | | | |
|---|---|---|---|---|---|---|---|
| C | A-a2<br>(Live parts to plastic enclosure) double/ reinforced insulation | ≤250 | 8 | 5 | 25 | 12.3 | 4200Va.c. |
| D | A-a1<br>(Live parts to PE) basic insulation | ≤250 | 4 | 2.5 | 5 | 4 | 1500Va.c. |
| E | A-e<br>(Live parts to SIP/SOP) double/ reinforced insulation | ≤250 | 8 | 5 | 35 | 25 | 4200Va.c. |

INSULATION DIAGRAM CONVENTIONS

Insulation diagram is a graphical representation of equipment insulation barriers, protective impedance and protective earthing. If feasible, use the following conventions to generate the diagram:

1. All isolation barriers are identified by letters between separate parts of diagram, for example separate transformer windings, optocouplers, wire insulation, creepage and clearance distances.
2. Parts connected to earth with large dots are protectively earthed. Other connections to earth are functional.
3. Applied parts are extended beyond the equipment enclosure and terminated with an arrow.
4. Parts accessible to the operator only are extended outside of the enclosure, but are not terminated with an arrow.
5. Blocks containing the letter "Z" indicate protective impedance.
6. Operational Insulation (OP) - indicates insulation that may be required for function of the equipment, but is not required or relied on for compliance with requirements of Cl. 17., 20. and 57.

| | | | |
|---|---|---|---|
| 6. | IDENTIFICATION, MARKING AND DOCUMENTS | | P |
| 6.1 | Marking on the outside of equipment or equipment parts | | P |
| | c) Markings of the specific power supply are affixed | The label of LCD monitor is affixed on its enclosure | P |
| | d) If marking is not practicable due to size or nature of enclosure, information is included in accompanying documents | Not applicable. | N |
| | e) Name and/or trademark of the manufacturer or supplier ..... : | Trademark of ADVANTECH | P |
| | f) Model or type reference ..... : | POC-173XX-AC-XX (X can be any alphanumeric character or blank) | P |
| | g) Rated supply voltages or voltage range(s) | 100-250Vac | P |

| IEC 60601-1 | | | |
|---|---|---|---|
| Clause | Requirement – Test | Result – Remark | Verdict |
| | Number of phases ..... : | Single phase | N |
| | Type of current ..... : | ~(AC) | P |
| | h) Rated frequency or rated frequency range(s) (Hz) ..... : | 50/60Hz | P |
| | j) Rated power input (VA, W or A) ..... : | 3.0A | P |
| | k) Power output of auxiliary mains socket-outlets | No auxiliary mains socket-outlets | N |
| | l) Class II symbol | Class I equipment | N |
| | Symbol for degree of protection against ingress of water provided ..... : | Ordinary protection: IPX0. No symbol necessary. | N |
| | Symbol for protection against electric shock .... : | The LCD type computer is not intended to be connected to the patient and does not have any patient applied parts, there is no such symbol required. | N |
| | If equipment has more than one applied part with different degrees of protection, the relevant symbols are clearly marked on such applied parts, or on or near relevant outlets | No applied parts. | N |
| | Symbol for protection of defibrillation-proof applied parts ..... : | No defibrillation-proof applied parts. | N |
| | Symbol 14 from Table DI for defibrillation-proof with protection partly in patient cable | Ditto | N |
| | m) Mode of operation (if no marking, suitable for continuous operation) | Continuous operation. | P |
| | n) Types and rating of external accessible fuses : | No external accessible fuses. | N |
| | p) Ratings of external output ..... : | | N |
| | q) Symbol for physiological effect(s): | *No applied parts* | N |
| | attention, consult accompanying documents | | N |
| | non-ionizing radiation, or symbols as adopted by ISO or IEC 60417 | Not applicable. | N |
| | r) Anaesthetic-proof symbol: AP or APG ..... : | Not of category AP or APG. | N |
| | s) Dangerous voltage symbol | | N |
| | t) Special cooling requirements | | N |
| | u) Limited mechanical stability | | N |
| | v) Protective packing requirement(s) | Transportation and storage:<br>Temperature 0°C to +45°C<br>Humidity: 10% to 95% | P |

| IEC 60601-1 | | | |
|---|---|---|---|
| Clause | Requirement – Test | Result – Remark | Verdict |
| | Marking(s) for unpacking safety hazard(s) | | N |
| | Equipment or accessories supplied sterile, marked as sterile | No sterile equipment | N |
| | y) Potential equalization terminal | Not applicable. | N |
| | Functional earth terminal | No functional earth | N |
| | z) Removable protective means | No removable protective means. | N |
| | Durability of marking test | Label withstands rubbing test:<br>Markings are rubbed by hand, without undue pressure, first for 15 s with a cloth rag soaked with distilled water, then for 15 s with a cloth rag soaked with methylated spirit at ambient temperature and then for 15 s with a cloth rag soaked with isopropyl alcohol. | P |
| 6.2 | Marking on the inside of equipment or equipment parts | | P |
| | a) Nominal voltage of permanently installed equipment | Not applicable. | N |
| | b) Maximum power loading for heating elements or holders for heating lamps | No heating elements or holders for heating lamps. | N |
| | c) Dangerous voltage symbol | High voltage exists in the DC/AC inverter of LCD monitor. However, when tested during the tests of sub-clause 17 the voltage complies with the leakage current limitations in normal and single fault conditions. As well the LCC requirement of IEC 60950 were considered and passed. Therefore the voltages are not considered to be dangerous. No marking required. | N |
| | d) Type of battery and mode of insertion | No batteries used. | N |
| | Marking referring to accompanying documents used for battery not intended to be changed by the operator | Ditto | N |

| IEC 60601-1 | | | |
|---|---|---|---|
| Clause | Requirement – Test | Result – Remark | Verdict |
| | e) Fuses accessible with a tool identified either by type and rating or by a reference to diagram | Fuses (F1, F2) marking printed on PCB of approved building-in type SPS.<br>Fuses rated as F1 T3.15AH 250V and F2 T3.15AH 250V | P |
| | f) Protective earth terminal | Symbol ⏚ provided on the internal metal chassis near the PE. However Class I appliance inlet approved component according to IEC60320. | P |
| | g) Functional earth terminal | | N |
| | h) Supply neutral conductor in permanently installed equipment (N) | Not permanently installed equipment. | N |
| | j) Markings required in 6.2 f), h), k) ,and l) remain visible after connection and are not affixed to parts which have to be removed | No such marking provided which used to be visible after connection. | N |
| | Markings comply with IEC 60445 | | P |
| | k) For permanently connected devices the supply connections are clearly marked adjacent to the terminals (or in accompanying documents for small equipment) | Not permanently connected equipment. | N |
| | l) Statement for suitable wiring materials at temperatures over 75 °C | Temperature below 75 °C. | N |
| | n) Capacitors and/or circuit parts are marked as required in Cl. 15. c) | No such capacitors and circuit parts. | N |
| 6.3 | Marking of controls and instruments | | N |
| | a) Mains switch clearly identified | See below. | P |
| | ON and OFF positions marked according to Symbols 15 and 16 of Table D1 or indicated by an adjacent indicator light | ON and OFF positions marked according to Symbols 15 and 16 of Table D1. | P |
| | b) Indications of different positions of control devices and switches | Green LED for power ON. Stand by switch with symbol: IEC60417 symbol No. 5009. | P |
| | c) Indication of the direction in which the magnitude of the function changes, or an indicating device | No such setting device provided. | N |
| | f) The functions of operator controls and indicators are identified | | P |

| IEC 60601-1 | | | |
|---|---|---|---|
| Clause | Requirement – Test | Result – Remark | Verdict |
| | g) Numeric indications of parameters are in SI units except for units listed in A2 | Not applicable. No such indications in the unit. | N |
| 6.4 | Symbols | | P |
| | Symbols used comply with Appendix D or IEC 60417 and/or IEC 60878 or ISO publications (if applicable) | | P |
| 6.5 | Colours of insulation of conductors | | P |
| | a) Protective earth conductor has green/yellow insulation | Green/yellow wire was used from inlet to internal metal chassis of LCD monitor. | P |
| | b) All insulations of internal protective earth conductors are green/yellow at least at their terminations | See 6.5 a) above. | P |
| | c) Only protective or functional earthing, or potential equalization conductors are green/yellow | Only protective earthing conductors are green/yellow. | P |
| | d) Colour of neutral conductor ..... : | Appliance inlet used, no power supply cord provided.<br>However, conductors "light blue" and "brown" used. | N |
| | e) Colours of phase conductors ..... : | Ditto | N |
| | Compliance with IEC 60227 and IEC 60245 | Ditto | N |
| | f) Additional protective earthing in multi-conductor, cords are marked green/yellow at the ends of the additional conductors | Not applicable. | N |
| 6.6 | Medical gas cylinders and connections | | N |
| | a) In accordance with ISO/R 32 | No medical gas cylinders and connections used. | N |
| | b) Identification of connection point | ditto | N |
| 6.7 | Indicator lights and push-buttons | | P |
| | a) Red indicator lights used exclusively to indicate a warning of danger and/or a need for urgent action | Only one green LED indicator used. | N |
| | Yellow used to indicate caution or attention required | ditto | N |
| | Green used to indicate ready for action | ditto | P |
| | b) Colour red used only for push-buttons by which a function is interrupted in case of emergency | | N |

| IEC 60601-1 | | | |
|---|---|---|---|
| Clause | Requirement – Test | Result – Remark | Verdict |
| 6.8 | Accompanying documents | | P |
| 6.8.1 | Equipment is accompanied by documents containing at least instructions for use, a technical description and an address to which the user can refer | Stated in user's manual. | P |
| | Classifications specified in Cl. 5. are included in both the instructions for use and the technical description | Stated in user's manual. | P |
| | Markings specified in 6.1 included in the accompanying documents if they have not been permanently affixed to equipment | Marking permanently affixed enclosure of equipment. | N |
| | Warning statements and the explanation of warning symbols provided in the accompanying documents | | N |
| 6.8.2 | Instructions for use | | P |
| | a) General information provided in instructions for use: | | P |
| | - state the function and intended application of the equipment | Stated in the chapter "Introduction" of Operation manual. | P |
| | - include an explanation of: the function of controls, displays and signals | Stated in the chapter "System Setup" of Operation manual. | P |
| | - the sequence of operation | Continuous operation. | N |
| | - the connection and disconnection of detachable parts and accessories | External power cord (not provided) is considered as detachable part. | P |
| | - the replacement of material which is consumed during operation | Not applicable. | N |
| | - information regarding potential electromagnetic or other interference and advice regarding avoidance | Statement is given that device is tested according to IEC 60601-1-2 in the chapter "Safety Instructions" of Operations manual. | P |
| | - include: indications of recognized accessories, detachable parts and materials, if the use of other parts or materials can degrade minimum safety | No accessories or detachable parts can degrade minimum safety. | N |
| | - instructions concerning cleaning, preventive inspection and maintenance to be performed including the frequency of such maintenance | Stated in the chapter "Safety Instructions" of Operations manual. | P |
| | General information provided in instructions: | | N |

| IEC 60601-1 | | | |
|---|---|---|---|
| Clause | Requirement – Test | Result – Remark | Verdict |
| | - information for the safe performance or routine maintenance | No need for routine maintenance. | N |
| | - parts on which preventive inspection and maintenance shall be performed by other persons including the periods to be applied | Ditto | N |
| | - explanation of figures, symbols, warning statements and abbreviations on the equipment | See User Manual: Chapter 1 "General Information" and Chapter 2 "System Setup". | P |
| | c) Signal output or signal input parts intended only for connection to specified equipment described | Not applicable. No equipment specified for connection to provided SIP/SOP. | N |
| | d) Details about acceptable cleaning, disinfection or sterilization methods included | No patient contact. | N |
| | e) Warning statement for mains operated equipment with additional power source | Power by one building-in type SPS, no additional power source | N |
| | f) A warning to remove primary batteries if equipment is not likely to be used for some time | No primary batteries. | N |
| | g) Instructions to ensure safe use and adequate maintenance of rechargeable batteries | No rechargeable batteries | N |
| | h) Identification of specified external power supplies or battery chargers necessary to ensure compliance with the requirements of IEC 60601-1 | Not applicable. | N |
| | j) Identification of any risks associated with the disposal of waste products, residues, etc. | No waste products, no environmental risks. | N |
| | Advice in minimizing these risks | ditto | N |
| 6.8.3 | Technical description | | P |
| | a) All characteristics essential for safe operation provided | Stated in the chapter "Safety Instructions" of operation manual. | P |
| | b) Required type and rating of fuses utilised in the mains supply circuit external to permanently installed equipment | Not permanently installed equipment. | N |
| | Instructions for replacement of interchangeable and/or detachable parts which are subject to deterioration during normal use | No detachable parts which are subject to deterioration during normal use | N |
| | c) Instructions or reference information for repair of equipment parts designated by the manufacturer as repairable provided | Stated in the chapter "Additional Information and Assistance" of operation manual. | P |

| IEC 60601-1 | | | |
|---|---|---|---|
| Clause | Requirement – Test | Result – Remark | Verdict |
| | d) Environmental conditions for transport and storage specified in accompanying documents and marked on packaging | Transportation and storage:<br>Temperature 0°C to +45°C<br>Humidity: 10% to 95% | P |
| 7. | POWER INPUT | | P |
| | Power input measurements | Highest load for this equipment is the CD-RW/DVD-ROM, FDD and HDD permanently access. The operator can connect additional options like a parallel printer or a serial device. Dummy load of 2.5W in connection to represent each USB load. See appended table. | P |
| 10. | ENVIRONMENTAL CONDITIONS | | P |
| 10.1 | Equipment is capable while packed for transport or storage of being exposed to the conditions stated by the manufacturer | Transportation and storage:<br>Temperature 0°C to +45°C<br>Humidity: 10% to 95% | P |
| 10.2.2 | a) Rated voltage not exceeding 250 V for hand-held equipment | Not hand-held equipment. | N |
| | Rated voltage not exceeding 250 V d.c. or single-phase a.c. or 500 V polyphase a.c. for equipment up to 4 kVA | Maximum 250Va.c. | P |
| | Rated voltage not exceeding 500 V for all other equipment | | N |
| | Rated input frequency not more than 1 kHz | 60Hz maximum. | P |
| | b) Internal replaceable electric power source specified | | N |
| 14. | REQUIREMENTS RELATED TO CLASSIFICATION | | P |
| 14.4 | a) Class I and Class II equipment in addition to basic insulation provided with an additional protection | | P |

| IEC 60601-1 | | | |
|---|---|---|---|
| Clause | Requirement – Test | Result – Remark | Verdict |
| | b) Equipment supplied from external d.c. source of reverse polarity results in no safety hazard | Not supplied from external d.c. power source. | N |
| 14.5 | b) Internally powered equipment complies with requirements for Class I or Class II equipment while connected to supply mains, and with requirements for internally powered equipment when not connected | Not applicable. Not internally powered equipment. | N |
| 14.6 | c) Applied parts intended for direct cardiac application are of type CF | Not applicable. | N |

| | | | |
|---|---|---|---|
| 15. | LIMITATION OF VOLTAGE AND/OR ENERGY | | P |
| | b) Voltage measured one sec after disconnection of the mains plug does not exceed 60 V | See appended table. | P |
| | c) For live parts accessible after equipment has been de-energized the residual voltage does not exceed 60 V nor residual energy exceeds 2 mJ | Not applicable. | N |
| | Marking provided for manual discharging | Ditto | N |

| | | | |
|---|---|---|---|
| 16. | ENCLOSURES AND PROTECTIVE COVERS | | N |
| | a) Equipment enclosed to protect against contact with live parts, and with parts which can become live (finger, pin, hook test) | Device is totally covered by enclosure. | P |
| | Insertion or removal of lamps: protection against contact with live parts provided | No lamps. | N |
| | b) Opening in a top cover so positioned that accessibility of live parts by a test rod is prevented | The test rod cannot enter into the openings of the top and each side of the enclosure. | P |
| | c) Conductive parts accessible after the removal of handles, knobs, levers: | | N |
| | - have a resistance of not more than 0,2 Ω | Not applicable. | N |
| | - separated from live parts by one of the means described in Cl. 17. g) | Ditto | N |
| | d) Parts with voltage exceeding 25 V a.c. or 60 V d.c. which cannot be disconnected by external mains switch or plug protected against contact | Appliance inlet serves as disconnecting device. All parts circuit inside the equipment disconnected from mains after removing the plug. | N |

| IEC 60601-1 | | | |
|---|---|---|---|
| Clause | Requirement – Test | Result – Remark | Verdict |
| | e) Removable enclosures protecting against contact with live parts | The enclosure is secured by screws. | P |
| | Removal possible only with the aid of a tool | ditto | P |
| | Use of automatic device making parts not live when the enclosure is opened or removed | ditto | N |
| | Exception 16 e) applied to the following parts . : | ditto | N |
| | f) Openings for the adjustment of controls using a tool. The tool not able to touch basic insulation or any live parts | No adjustments necessary. | N |

| | | | |
|---|---|---|---|
| 17. | SEPARATION | | P |
| | a) Separation method of the applied part from live parts:<br>*No applied parts.* | | — |
| | 1) basic insulation: applied part earthed | No applied parts | N |
| | 2) by protectively earthed conductive part (e.g. screen) | Ditto | N |
| | 3) by separate earthed intermediate circuit limiting leakage current to applied part in event of insulation failure | ditto | N |
| | 4) by double or reinforced insulation | ditto | N |
| | 5) by protective impedances limiting current to applied part | ditto | N |
| | Additional leakage current test in single fault conditions | ditto | N |
| | c) There is no conductive connection between applied parts and accessible conductive parts, which are not protectively earthed | ditto | N |
| | d) Supplementary insulation between hand-held flexible shafts and motor shafts (Class I) | Not applicable. | N |
| | g) Separation method of accessible parts other than applied parts from live parts: | | — |
| | 1) basic insulation: accessible part earthed | See Insulation Diagram on page 6 and 7. | P |
| | 2) by protectively earthed conductive part (e.g. screen) | See Insulation Diagram on page 6 and 7. | P |
| | 3) by separate earthed intermediate circuit limiting leakage current to enclosure in event of insulation failure | No separate earthed intermediate circuit used. | N |

| IEC 60601-1 | | | |
|---|---|---|---|
| Clause | Requirement – Test | Result – Remark | Verdict |
| | 4) by double or reinforced insulation | See Insulation Diagram on page 6 and 7. | P |
| | 5) by protective impedances limiting current to accessible part | | N |
| | Additional leakage current test in single fault conditions | | N |
| | h) Arrangements used to isolate defibrillation-proof applied parts so designed that: | | — |
| | - no hazardous electrical energies appear during a discharge of a cardiac defibrillator | Not applicable. | N |
| | - after exposure to the defibrillation voltage, the equipment continues to perform its intended function | | N |

| | | | |
|---|---|---|---|
| 18. | PROTECTIVE EARTHING, FUNCTIONAL EARTHING AND POTENTIAL EQUALIZATION | | P |
| | a) Accessible parts of Class I equipment separated from live parts by basic insulation connected to the protective earth terminal | The touchable part of the metal chassis is connected to PE. | P |
| | b) Protective earth terminals suitable for connection to the protective earth conductor | Approved appliance inlet used. | P |
| | e) Potential equalization conductor: | | N |
| | - readily accessible | No potential equalization conductor. | N |
| | - accidental disconnection prevented in normal use | Ditto | N |
| | - conductor detachable without the use of a tool | Ditto | N |
| | - power supply cord does not incorporate a potential equalization conductor | Ditto | N |
| | - connection means marked with Symbol 9, Table DI | Ditto | N |
| | f) For equipment without power supply cord, impedance between protective earth terminal and accessible metal part ≤ 0,1 Ω | See appended table. | P |
| | For equipment with an appliance inlet, impedance between protective earth contact and any accessible metal part ≤ 0,1 Ω | Ditto | P |

| IEC 60601-1 | | | |
|---|---|---|---|
| Clause | Requirement – Test | Result – Remark | Verdict |
| | For equipment with a non-detachable power supply cord, impedance between protective earth pin in mains plug and accessible metal part ≤ 0,2 Ω | Not applicable. | N |
| | g) If the impedance of protective earth connections other than in Cl. 18. f) exceeds 0,1 Ω, the allowable value of the enclosure leakage current is not exceeded in single fault condition | Ditto | N |
| | k) Functional earth terminal not used to provide protective earthing | | N |
| | l) Class II equipment with isolated internal screens | | — |
| | - insulation of screens and all internal wiring connected to them is double insulation or reinforced insulation | Class I equipment. | N |
| | - functional earth terminal clearly marked | Ditto | N |
| | - explanation of functional earth terminal provided in the accompanying documents | Ditto | N |

| | | | |
|---|---|---|---|
| 19. | CONTINUOUS LEAKAGE CURRENTS AND PATIENT AUXILIARY CURRENTS | | P |
| 19.1 | b) Leakage currents | See appended table. | P |
| | Earth leakage current | Ditto | P |
| | Enclosure leakage current | Ditto | P |
| | Patient leakage current | | N |
| | Patient auxiliary current | | N |

| | | | |
|---|---|---|---|
| 20. | DIELECTRIC STRENGTH AT OPERATING TEMPERATURE | | P |
| | Overall compliance with Cl. 20. | See appended table. | P |

| | | | |
|---|---|---|---|
| 21. | MECHANICAL STRENGTH | | P |
| | a) Sufficient rigidity of enclosure tested by: force of 45 N | See appended table. | P |
| | b) Sufficient strength of an enclosure tested by: impact hammer | Ditto | P |

| IEC 60601-1 | | | |
|---|---|---|---|
| Clause | Requirement – Test | Result – Remark | Verdict |
| | c) Portable equipment carrying handles or grips withstand the requirements of the loading test | No handles or grips. | N |
| 21.3 | No damage to parts of patient support and/or immobilization system after the loading test | No patient support or immobilization system. | N |
| 21.5 | Hand-held equipment or equipment parts are safe after drop test | Not hand-held equipment. | N |
| 21.6 | Portable and mobile equipment is able to withstand rough handling | See appended table. | P |

| | | | |
|---|---|---|---|
| 22. | MOVING PARTS | | P |
| 22.2 | a) Moving parts of a transportable equipment are provided with guards which form an integral part of the equipment | DC fan covered by metal chassis and plastic enclosure can not be touched. | P |
| | b) Moving parts of a stationary equipment are provided with similar guards as above, unless it is evident that equivalent protection is separately provided during installation | Not stationary equipment. | N |
| 22.3 | Cords (ropes), chains and bands are provided with guides to prevent them from running off or from jumping out of their guiding devices | | N |
| | Guides or other safeguards are removable only with a tool | | N |
| 22.4 | Dangerous movements of equipment parts, which may cause physical injury to the patient, are possible only by the continuous activation of the control by the operator | Not dangerous movements. | N |
| 22.6 | Parts of equipment subject to mechanical wear are accessible for inspection | No such parts. | N |
| 22.7 | Means provided for emergency switching of an electrically produced mechanical movement which could cause a safety hazard | | N |
| | The means for emergency switching is readily identifiable and accessible and does not introduce a further safety hazard | | N |
| | Devices for emergency stopping able to break the full load current of the relevant circuit, taken into account possible stalled motor currents | | N |
| | Means for stopping of movements operate as a result of one single action | | N |

| IEC 60601-1 | | | |
|---|---|---|---|
| Clause | Requirement – Test | Result – Remark | Verdict |

| | | | |
|---|---|---|---|
| 23. | SURFACES, CORNERS AND EDGES | | P |
| | Rough surfaces, sharp corners and edges which may cause injury or damage avoided or covered | Edges of LCD type computer are rounded. | P |

| | | | |
|---|---|---|---|
| 24. | STABILITY IN NORMAL USE | | P |
| 24.1 | Equipment does not overbalance during normal use when tilted trough an angle of 10° | Test have been carried out under the most unfavorable position of LCD monitor. | P |
| 24.3 | Equipment overbalances when tilted through an angle of 10°: | | N |
| | - does not overbalance when tilted through an angle of 5° in any position excluding transport | | N |
| | - carry a warning notice stating that transport should only be undertaken in a certain position | | N |
| | - in the position specified for transport does not overbalance when tilted to an angle of 10° | | N |
| 24.6 | a) Equipment or its parts with a mass of more than 20 kg is provided with: | | N |
| | - suitable handling devices (grips etc.), or | Mass <20kg | N |
| | - instructions for lifting and handling during assembly | | N |
| | b) On portable equipment with a mass of more than 20 kg carrying handle(s) is (are) so situated that equipment may be carried by 2 or more persons | | N |

| | | | |
|---|---|---|---|
| 25. | EXPELLED PARTS<br>*No expelled parts.* | | N |
| 25.1 | Protective means are provided where expelled parts of the equipment could be a hazard | Not applicable. No expelled parts. | N |
| 25.2 | Display vacuum tubes with a face dimension exceeding 16 cm are provided with adequate protection against implosion | ditto | N |

| | | | |
|---|---|---|---|
| 28. | SUSPENDED MASSES<br>*No suspended masses.* | | N |
| 28.3 | Suspension system with safety device: | | N |

| IEC 60601-1 | | | |
|---|---|---|---|
| Clause | Requirement – Test | Result – Remark | Verdict |
| | Safety device provided where the integrity of a suspension depends on parts which may have hidden defects, or on parts having safety factors not complying with 28.4 | Not applicable. Not suspended masses. | N |
| | Safety device has safety factors complying with 28.4.2 | ditto | N |
| | Clear indication to the operator that the safety device has been activated after failure of suspension means | ditto | N |
| 28.4 | Suspension systems of metal without safety devices: | | N |
| | 1) the total load does not exceed the safe working load | Not applicable. Not suspended masses. | N |
| | 2) safety factors not less than 4 where it is unlikely that supporting characteristics will be impaired | ditto | N |
| | 3) safety factors not less than 8 where impairment is expected | ditto | N |
| | 4) safety factors multiplied by 1,5 for metal having an elongation at break of less than 5% | ditto | N |
| | 5) sheaves, sprockets, bandwheels and guides so constructed that the safety factors shall be maintained till replacement | ditto | N |
| 29. | X-RADIATION<br>*no X-radiation* | | N |
| 29.2 | Equipment not intended to produce X-radiation produces an exposure ≤ 130 nC/kg (0,5 mR) | Not applicable. | N |
| 36. | ELECTROMAGNETIC COMPATIBILITY | | P |
| | Equipment complies with IEC 60601-1-2 | The LCD type computer has passed the requirements of EMI/EMC regulation according to EN/IEC60601-1-2. | P |

| IEC 60601-1 | | | |
|---|---|---|---|
| Clause | Requirement – Test | Result – Remark | Verdict |

| | | | |
|---|---|---|---|
| 37. | COMMON REQUIREMENTS FOR CATEGORY AP AND CATEGORY APG EQUIPMENT | | N |
| | Requirements for category AP and APG equipment (Cl. 37. - 41.) | Not applicable. | N |

| | | | |
|---|---|---|---|
| 42. | EXCESSIVE TEMPERATURES | | P |
| 42.1 | Equipment does not attain temperatures exceeding the values given in Table Xa over the range of ambient temperatures specified in 10.2.1 | See appended table. | P |
| 42.2 | Equipment does not attain temperatures exceeding the values given in Table Xb at 25 °C ambient | ditto | P |
| 42.3 | Applied parts not intended to supply heat have surface temperatures not exceeding 41 °C | No applied parts. | N |
| 42.5 | Guards to prevent contact with hot surfaces removable only with a tool | No hot surface. | N |

| | | | |
|---|---|---|---|
| 43. | FIRE PREVENTION | | P |
| | Strength and rigidity necessary to avoid a fire hazard | Enclosure (Chi Mei, type PA-765A) meets the requirements of flammability-class V-0 and passed the test of sub-clause 21. | P |

| | | | |
|---|---|---|---|
| 44. | OVERFLOW, SPILLAGE, LEAKAGE, HUMIDITY, INGRESS OF LIQUIDS, CLEANING, STERILIZATION, DISINFECTION and COMPATLBILITY | | P |
| 44.2 | If equipment contains a liquid reservoir: | | N |
| | - the equipment is electrically safe after 15% overfill steadily over a period of 1 min | No liquid reservoir provided. | N |
| | - transportable equipment is electrically safe after additionally having been tilted through an angle of 15° in the least favourable direction(s) (if necessary with refilling) | | N |

| IEC 60601-1 | | | |
|---|---|---|---|
| Clause | Requirement – Test | Result – Remark | Verdict |
| 44.3 | Electrical properties of the equipment do not change in connection of spillage test (200 ml of water) | | N |
| 44.4 | Liquid which might escape in a single fault condition does not wet parts which may cause a safety hazard | | N |
| 44.5 | Equipment sufficiently protected against the effects of humidity. | Performed at 25°C, 95% R.H. (48hrs) | P |
| 44.6 | Enclosures designed to give a protection against harmful ingress of water classified according to IEC Publication 529 | | N |
| 44.7 | Equipment capable of withstanding cleaning, sterilization or disinfection without deterioration of safety provisions | No applied parts. | N |

| | | | |
|---|---|---|---|
| 45. | PRESSURE VESSELS AND PARTS SUBJECT TO PRESSURE | | N |
| 45.2 | Pressure vessel with pressure volume greater than 200 kPa x l and pressure greater than 50 kPa withstand the hydraulic test pressure | No pressure vessels and parts used. Not applicable. | N |
| 45.3 | The maximum pressure does not exceed the maximum permissible working pressure for individual parts | ditto | N |
| 45.7 | Unless excessive pressure cannot occur, pressure-relief device provided | ditto | N |
| | a) Pressure-relief device connected as close as possible to the pressure vessel | ditto | N |
| | b) Readily accessible for inspection | ditto | N |
| | c) Not capable of being adjusted or rendered inoperative without a tool | ditto | N |
| | d) Discharge opening so located that the released material is not directed towards any person | ditto | N |
| | e) Discharge opening so located that operation will not deposit material which may cause a safety hazard | ditto | N |
| | f) Adequate discharge capacity to ensure that pressure does not exceed the maximum permissible working pressure | ditto | N |
| | g) No shut-off valve between the pressure-relief device and the parts intended to be protected | ditto | N |

| IEC 60601-1 | | | |
|---|---|---|---|
| Clause | Requirement – Test | Result – Remark | Verdict |
| | h) Minimum number of cycles of operation is 100 000 | ditto | N |
| 48. | BIOCOMPATIBILITY | | N |
| | Parts of equipment and accessories intended to come into contact with biological tissues, cells or body fluids are evaluated in accordance with ISO 10993-1 | No patient contacts. | N |
| 49. | INTERRUPTION OF THE POWER SUPPLY | | P |
| 49.1 | Thermal cut-outs and over-current releases with automatic resetting not used if they may give a safety hazard | No thermal cut-outs and re-settable over-current protective device provided. | P |
| 49.2 | Interruption and restoration of the power supply shall not result in a safety hazard other than interruption of its intended function | However, compliance has to be evaluated as well for the way of application. | P |
| 49.3 | Means are provided for removal of mechanical constraints on a patient in case of a supply mains failure | Not applicable. | N |
| 51. | PROTECTION AGAINST HAZARDOUS OUTPUT | | N |
| 51.4 | Equipment providing both low-intensity and high-intensity outputs provided with means minimizing the possibility of a high-intensity output being selected accidentally | There is no other output than SIP/SOP interface (USB port, PS2 port, 4* serial port, parallel port, ethernet port, microphone connector, audio in/out connector, game port and video port). All provide and should be connected to SELV only. | N |
| 52. | ABNORMAL OPERATION AND FAULT CONDITIONS | | P |
| 52.1 | Equipment is so designed and manufactured that even in single fault condition no safety hazard as described under 52.4 exists (see 3.1 and Cl. 13.) | See appended table. | P |

| IEC 60601-1 | | | |
|---|---|---|---|
| Clause | Requirement – Test | Result – Remark | Verdict |
| | The safety of equipment incorporating programmable electronic systems is checked by applying IEC 60601-1-4 | Software incorporated in application should be evaluated in final setup. | N |
| 52.5.2 | Failure of thermostat presents no safety hazard | No thermostat used. | N |
| 52.5.3 | Short-circuiting of either constituent part of double insulation presents no safety hazard | See appended table. | P |
| 52.5.5 | Impairment of cooling: temperatures not exceeding 1,7 times the values of Cl. 42. minus 17,5 °C | See appended table. | P |
| 52.5.6 | Locking of moving parts presents no safety hazard | Lock of DC fan will not cause any hazards. See appended table. | P |
| 52.5.7 | Interruption and short-circuiting of motor capacitors presents no safety hazard | No motor capacitors. | N |
| 52.5.8 | Duration of motors locked rotor test in compliance with 52.5.8 | See appended table. | P |
| 52.5.9 | Failure of one component at a time presents no safety hazard | See appended table. | P |
| 52.5.10 | Overload of heating elements presents no safety hazard | No heating elements. | N |
| | f) Motors intended to be remotely controlled, automatically controlled, or liable to be operated continuously provided with running overload protection | Approved CPU fan used. | P |
| | h) Equipment with three-phase motors can safely operate with one phase disconnected | No three-phase motors. | N |

| | | | |
|---|---|---|---|
| 56. | COMPONENTS AND GENERAL ASSEMBLY | | P |
| | List of critical components | See appended table. | P |
| 56.1 | b) Ratings of components not in conflict with the conditions of use in equipment | The components are used according to their ratings. | P |
| | Ratings of mains components are identified | The appliance inlet is marked with its rating. Other mains components have been evaluated during the approval of SPS. | P |
| | d) Components, movements of which could result in a safety hazard mounted securely | No such component. | N |

| IEC 60601-1 | | | |
|---|---|---|---|
| Clause | Requirement – Test | Result – Remark | Verdict |
| | f) Conductors and connectors are secured and/or insulated to prevent accidental detachment resulting in a safety hazard | Conductors and connectors are adequately secured and insulated. Accidental detachment does not result in a safety hazard. | P |
| 56.3 | a) Connectors provide separation required by Cl. 17. g) | | P |
| | Plugs for connection of patient circuit leads can not be connected to other outlets on the same equipment | No patient connection. | N |
| | Medical gas connections not interchangeable | No medical gas connections used. | N |
| | b) Accessible metal parts cannot become live when detachable interconnection cord between different parts of equipment is loosened or broken | There are only SELV interconnection cords provided except of DC/AC inverter that had been evaluated according to the requirement of Limited current Circuit (LCC) of IEC60950.<br>See appended table. | P |
| | c) Leads with conductive connection to a patient are constructed such that no conductive connection remote from the patient can contact earth or hazardous voltages | No such leads. | N |
| 56.4 | Connections of capacitors | | P |
| | Not connected between live parts and non-protectively earthed accessible parts | No such component used. | P |
| | If connected between mains part and protectively earthed metal parts, comply with IEC 60384-14 | Evaluated in approved SPS. | N |
| | Enclosure of capacitors connected to mains part and providing only basic insulation is not secured to non-protectively earthed metal parts | Evaluated in approved SPS. | N |
| | Capacitors or other spark-suppression devices are not connected between the contacts of thermal cut-outs | Evaluated in approved SPS. | N |
| 56.5 | Protective devices which cause disconnection from the supply mains by producing a short-circuit not provided in equipment | No such device used. | N |
| 56.6 | Temperature and overload control devices | | N |

| IEC 60601-1 | | | |
|---|---|---|---|
| Clause | Requirement – Test | Result – Remark | Verdict |
| | a) Thermal cut-outs which have to be reset by a soldering not fitted in equipment | No such thermal cut-out used. | N |
| | Thermal safety devices provided where necessary to prevent operating temperatures exceeding the limits | Not applicable. | N |
| | Independent non-self-resetting thermal cut-out provided where a failure of a thermostat could constitute a safety hazard | Not applicable. | N |
| | Audible warning provided where the loss of function caused by operation of a thermal cut-out presents a safety hazard | Ditto | N |
| | Self-resetting thermal cut-outs and self-resetting over-current releases operated 200 times | Ditto | N |
| | Non-self-resetting over-current releases operated 10 times | Ditto | N |
| | b) Thermostats with varying temperature settings clearly indicated | No such thermostat used. | N |
| | Operating temperature of cut-outs is clearly indicated | Ditto | N |
| 56.7 | Batteries | | P |
| | a) Battery compartments are: | | N |
| | - adequately ventilated | No batteries provided which would exit gas during discharge. | N |
| | - accidentally short-circuiting is prevented | The design of battery holder circuit (RTC VBAT) prevents the short-circuiting and incorrect polarity. | P |
| | b) Incorrect polarity of connection prevented | Ditto | P |
| 56.8 | Indicators, unless indication is provided by other means (from the normal operation position), indicator lights are used (colour see 6.7) | | P |
| | - to indicate that equipment is energized | By green LED located on front side of LCD monitor. | P |
| | - to indicate the operation of non-luminous heaters if a safety hazard could result | No heaters | N |
| | - to indicate when output exists if a safety hazard could result | Not applicable. | N |
| | - charging mode indicator is provided | No charging mode indicators. | N |
| 56.10 | Actuating parts of controls | | P |

| IEC 60601-1 | | | |
|---|---|---|---|
| Clause | Requirement – Test | Result – Remark | Verdict |
| | b) Actuating parts are adequately secured to prevent them from working loose during normal use | Brightness adjust knob and contract adjust knob provided on front side of the LCD type computer. | P |
| | Controls are secured to prevent the movement relative to scale marking (safety related only) | | N |
| | Detachable indicating devices are prevented from incorrect connection without the use of a tool | Not applicable. | N |
| | c) Stops are provided on rotating controls: | | N |
| | - to prevent an unexpected change from maximum to minimum or vice versa where this could produce a safety hazard | ditto | N |
| | - to prevent damage to wiring | ditto | N |
| 56.11 | Cord-connected hand-held and foot-operated control devices<br>*No such devices.* | | N |
| | a) Contain voltages not exceeding 25 V a.c. or 60 V d.c. and isolated from the mains part by Cl. 17. g) | | N |
| | b) Hand-held devices comply with the requirement and test of 21.5 | | N |
| | Foot-operated control devices designed to support the weight of an adult human being | | N |
| | c) Devices shall not change their setting when inadvertently placed | | N |
| | d) Foot-operated control devices are at least IPX1 | | N |
| | For surgical use, electrical switching parts are IPX8 | | N |
| | e) Adequate strain relief at the cord entry provided | | N |

| | | | |
|---|---|---|---|
| 57. | MAINS PARTS, COMPONENTS AND LAYOUT | | P |
| 57.1 | Isolation from supply mains | | P |
| | a) Equipment provides means to isolate its circuits electrically from the supply mains on all poles simultaneously | Appliance inlet used. | P |

| IEC 60601-1 | | | |
|---|---|---|---|
| Clause | Requirement – Test | Result – Remark | Verdict |
| | Means for isolation incorporated in equipment or, if external, specified in the accompanying documents | See 57.1.h. | N |
| | d) Switches used to comply with 57.1 a) comply with the creepage distances and air clearances as specified in IEC 60328 | Appliance inlet used. | N |
| | f) Mains switches not incorporated in a power supply cord | | N |
| | h) Appliance couplers and flexible cords with mains plugs provide compliance with 57.1 a) | Appliance inlet serves as disconnecting device. | P |
| | m) Fuses and semiconductor devices are not used as isolating devices | | P |
| 57.2 | Mains connectors and appliance inlets | | P |
| | e) Auxiliary mains socket-outlets on non-permanently installed equipment of a type that cannot accept a mains plug | No auxiliary mains socket-outlets used. | P |
| | g) Unless functional earth needs to be provided, Class I appliance inlet is not used in Class II equipment | Not applicable. | N |
| 57.3 | Power supply cords | | N |
| | a) Not more than one connection to a particular supply mains | No power supply cord provided. | N |
| | If alternative supply allowed, no safety hazards when more than one connection is made simultaneously | Ditto | N |
| | The mains plug has only one power supply cord | Ditto | N |
| | Non-permanently connected equipment provided with power supply cord or appliance inlet | Ditto | N |
| | b) Power supply cords sufficiently robust to comply with the requirements of IEC 60227, designation 53 and IEC 60245, designation 53 | Ditto | N |
| | Polyvinyl chloride insulated power supply cords not used for equipment having external metal parts with a temperature exceeding 75 °C | No power cord provided. | N |
| | c) Nominal cross-sectional area of conductors of power supply cords not less than in Table XV | No power cord provided. However the user's manual states that the minima cross-sectional area of the conduction of a power cord should be 0.75mm$^2$. | N |

| IEC 60601-1 | | | |
|---|---|---|---|
| Clause | Requirement – Test | Result – Remark | Verdict |
| | d) Stranded conductors not soldered if fixed by any clamping means | Not applicable due to appliance inlet used. | N |
| 57.4 | Connection of power supply cords | | N |
| | a) Cord anchorages: | | |
| | Equipment provided with power supply cords has cord anchorages such that the conductors are relieved from strain, including twisting | Appliance inlet used. Not applicable. | N |
| | Tying the cord into a knot or tying the ends with string not used | Ditto | N |
| | Cord anchorages made of insulating material or metal insulated from unearthed accessible metal parts by supplementary insulation | Ditto | N |
| | Cord anchorages made of metal provided with an insulating lining | Ditto | N |
| | Clamping screws do not bear directly on the cord insulation | Ditto | N |
| | Screws associated with cable replacement are not used to secure other components | Ditto | N |
| | Conductors of the power supply cord so arranged that the protective earth conductor is not subject to strain as long as the phase conductors are in contact with their terminals | Ditto | N |
| | b) Power supply cord protected against excessive bending | Ditto | N |
| | c) Adequate space inside equipment to allow the supply cable conductors to be introduced and connected | Ditto | N |
| 57.5 | Mains terminal devices and wiring of mains part | | N |
| | a) Mains connected equipment other than those with a detachable supply cord is provided with mains terminals, where connections are made with screws, nuts or equally effective methods | Appliance inlet used. Not applicable. | N |
| | If a conductor breaks away, barriers are provided such that creepage distances and air clearances cannot be reduced | Ditto | N |
| | Screws and nuts which clamp external conductors shall not serve to fix any other component | Ditto | N |
| | b) Terminals closely grouped with any protective earth terminal | Ditto | N |

| IEC 60601-1 | | | |
|---|---|---|---|
| Clause | Requirement – Test | Result – Remark | Verdict |
| | Mains terminal devices accessible only with use of a tool | Ditto | N |
| | Mains terminal devices located or shielded so that, should a wire of a stranded conductor escape when the conductors are fitted, there is no risk of accidental contact | Ditto | N |
| | c) Internal wiring not subjected to stress when the means for clamping the conductors are tightened or loosened | Ditto | N |
| | d) Cord terminals shall not require special preparation of the conductor | No such mains terminals used. | N |
| 57.6 | Mains fuses and over-current releases | | P |
| | Fuses or over-current releases provided accordingly for Class I and Class II | Evaluated during the approval of SPS. | N |
| | Current rating of mains fuses and over-current releases such that they reliably carry the normal operating current | Ditto | N |
| | Protective earth conductor not fused | | P |
| | Neutral conductor not fused for permanently installed equipment | Not permanently installed equipment. | N |
| 57.8 | Wiring of mains part | | P |
| | a) Individual conductors in the mains part with insulation not at least electrically equivalent to that of the individual conductors of flexible supply cords complying with IEC 60227 or IEC 60245, treated as bare conductor ..... : | The internal mains wiring has at least electrically equivalent to that of the individual conductors of flexible supply cords complying with IEC 60227 or IEC 60245. | P |
| | b) Cross-sectional area of conductors up to protective device not less than the minimum required for the power supply | Cross-sectional area of L, N, PE- wire from inlet to PCB is 0.75 $mm^2$. | P |
| | Cross-sectional area of other wiring and the sizes of tracks on printed wiring circuits are sufficient to prevent any fire hazard | Evaluated during the approval of SPS. | N |
| 57.9 | Mains supply transformers<br>*Evaluated during the approval of SPS.* | | N |
| 57.9.1 | Overheating | | N |
| | External to the transformer protective devices connected in such a way that failure of any component cannot render the protective devices inoperative | | N |

| IEC 60601-1 | | | |
|---|---|---|---|
| Clause | Requirement – Test | Result – Remark | Verdict |
| | a) Short-circuit of secondary windings not caused excessive temperature | | N |
| | b) Overload of secondary windings not caused excessive temperature | | N |
| 57.9.2 | The dielectric strength of the electrical insulation of a mains supply transformer such that it passes tests | | N |
| 57.9.4 | Construction | | N |
| | a) Separation of primary and secondary windings: | | N |
| | - separate bobbins or formers | | N |
| | - one bobbin with insulating partition | | N |
| | - one bobbin with concentric windings and having copper screen with a thickness of not less than 0,13 mm | | N |
| | - concentrically wound on one bobbin with windings separated by double insulation | | N |
| | c) Means provided to prevent displacement of end turns | | N |
| | d) Insulated overlap of not less than 3 mm if a protective earth screen has only one turn | | N |
| | e) Insulation between the primary and secondary winding in transformers with double insulation: | | N |
| | - 1 insulation layer having a thickness of at least 1 mm | | N |
| | - at least 2 insulation layers with a total thickness of at least 0,3 mm | | N |
| | - 3 layers provided that each combination of 2 layers can withstand the dielectric strength test for reinforced insulation | | N |
| | g) Exit of the wires of toroidal transformers provided with double sleeving complying with requirements for double insulation and having a total thickness at least 0,3 mm extending at least 20 mm outside the winding | | N |
| 57.10 | Creepage distances and air clearances | | P |
| | a) Values: compliance with at least the values of Table XVI | See table for insulation diagram on page 6 and 7. | P |
| | Creepage distances for slot insulation of motors are at least 50% of the specified values | | N |

| IEC 60601-1 | | | |
|---|---|---|---|
| Clause | Requirement – Test | Result – Remark | Verdict |
| | b) Minimum creepage distances and air clearances in the mains part between parts of opposite polarity not required if short-circuiting does not produce a safety hazard | Approved appliance inlet used. | N |
| | c) Creepage distances or clearances of at least 4 mm are maintained between defibrillation-proof applied parts and other parts | No applied parts. | N |
| 58. | PROTECTIVE EARTHING - TERMINALS AND CONNECTIONS | | P |
| 58.1 | Clamping means of the protective earth terminal | No such means used. | N |
| | Not be able to loosen without the aid of a tool | | N |
| | Screws for internal earth connections are covered or protected against loosening from outside | Screw for PE connection can not be accessed from outside due to enclosure provided. However a star washer was provided for the PE screw connection. | P |
| 58.7 | Earth pin of the appliance inlet regarded as the protective earth terminal | | P |
| 58.8 | The protective earth terminal is not used for the mechanical connection or the fixing of any component not related to earthing | | P |
| 58.9 | Where the protective earth connections are made via a plug or socket device the protective earth connection is made before and interrupted after the supply connections during connection and interrupting | | P |
| 59. | CONSTRUCTION AND LAYOUT | | P |
| 59.1 | Internal wiring | | P |
| | a) Cables and wiring protected against contact with a moving part | Cables and wiring were fixed by cable tie reliably to against contact with DC Fan. | P |
| | Wiring having basic insulation only protected by additional fixed sleeving | All the wiring inside the monitor is fixed. No sleeving required. | N |
| | Components are not likely to be damaged in the normal assembly or replacement of covers | Service areas are supposed to be accessed by authorized, well trained personnel only. | P |

| IEC 60601-1 | | | |
|---|---|---|---|
| Clause | Requirement – Test | Result – Remark | Verdict |
| | b) Movable leads are not bent around a radius of less than five times the outer diameter of the lead | Not applicable. | N |
| | c) Insulating sleeving adequately secured | No sleeving used. | N |
| | If the sheath of a flexible cable or cord is used as supplementary insulation it complies with requirements of IEC 60227 and IEC 60245 and dielectric strength test | No such flexible cable or cord is used. | N |
| | Conductors subjected to temperatures exceeding 70 °C, have an insulation of heat-resistant material | | N |
| | d) Aluminium wires of less than 16 mm² cross-section not used | No aluminium wires. | N |
| | f) Connecting cords between equipment parts considered as belonging to the equipment | No such connecting cords used. | N |
| 59.2 | Insulation | | P |
| | b) Mechanical strength and resistance to heat and fires retained by all types of insulation | See appended tables. | P |
| | c) Insulation not likely to be impaired by deposition of dirt or dust resulting from wear of parts | No insulation likely to be impaired by deposition of dirt or dust resulting from wear of parts. | P |
| | Parts of rubber resistant to ageing | No rubber used. | N |
| 59.3 | Excessive current and voltage protection | | P |
| | Internal electrical power source provided with device for protection against fire hazard | Not applicable. No internal power source used. | N |
| | Fuse elements replaceable without opening the enclosure fully enclosed in a fuseholder | Not applicable. | N |
| | Protective devices between an isolated applied part and the body of the equipment do not operate below 500 V r.m.s. | No such device. | N |
| 59.4 | Oil containers<br>*No oil container used.* | | N |
| | Oil containers adequately sealed | No oil container used. Not applicable. | N |
| | Container design shall allow for the expansion of the oil | Ditto | N |
| | Oil containers in mobile equipment sealed to prevent the loss of oil during transport | Ditto | N |

| IEC 60601-1 | | | |
|---|---|---|---|
| Clause | Requirement – Test | Result – Remark | Verdict |
| | Partially sealed oil-filled equipment or equipment parts provided with means for checking the oil level | Ditto | N |

| IEC 60601-1 | | | |
|---|---|---|---|
| Clause | Requirement – Test | Result – Remark | Verdict |

| 6.1 | TABLE: marking durability | P |
|---|---|---|
| marking tested | Remarks | |
| Product rating label | Markings are rubbed by hand, without undue pressure, first for 15 s with a cloth rag soaked with distilled water, then for 15 s with a cloth rag soaked with methylated spirit at ambient temperature and then for 15 s with a cloth rag soaked with isopropyl alcohol. | |
| | | |

| 7. | TABLE: power input | | | | P |
|---|---|---|---|---|---|
| operating condition | Voltage (V) | Frequency (Hz) | Current (A) | Power (W) | Remarks |
| Normal operation with Max. load | 100 | 50 | 1.275 | 83 | Rated current:3.0A |
| | 100 | 60 | 1.243 | 82 | |
| | 250 | 50 | 0.632 | 81 | |
| | 250 | 60 | 0.627 | 81 | |
| | | | | | |

Max. load: Full raster, max. brightness, contrast.

Max. load for this equipment is the CD-RW/DVD-ROM, FDD and HDD permanently access. The operator can connect additional options like a parallel printer or a serial device. Dummy load of 2.5W in connection to represent each USB load.

| 15. b) | TABLE: residual voltage in attachment plugs | | | | | | | | | | P |
|---|---|---|---|---|---|---|---|---|---|---|---|
| voltage measured between: | measurements (V) | | | | | | | | | | Remarks |
| | 1 | 2 | 3 | 4 | 5 | 6 | 7 | 8 | 9 | 10 | |
| supply pins (pin 1 & pin 2) [1]) | 14 | 14 | 14 | 14 | 14 | 14 | 14 | 14 | 14 | 14 | 1sec. |
| pin 1 and earth pin | 0 | 0 | 0 | 0 | 0 | 0 | 0 | 0 | 0 | 0 | 1sec. |
| pin 2 and earth pin | 0 | 0 | 0 | 0 | 0 | 0 | 0 | 0 | 0 | 0 | 1sec. |
| | | | | | | | | | | | |

| IEC 60601-1 | | | |
|---|---|---|---|
| Clause | Requirement – Test | Result – Remark | Verdict |

| |
|---|
| Note:<br>1. pin 1: Line, pin 2: Neutral.<br>2. Input: 250V, 60Hz. |

| 15. c) | TABLE: residual voltage or energy in capacitors | | | | N |
|---|---|---|---|---|---|
| capacitor and its location | residual voltage (V) | time after disconnection (s) | Capacitance value (µF) | residual energy (mJ) | Remarks |
| | | | | | |
| | | | | | |
| Device is building-in type. Compliance has be checked in final system | | | | | |

| 17. h1) | TABLE: defibrillation-proof applied parts | | | | N |
|---|---|---|---|---|---|
| test condition: fig. 50 or 51 | accessible part of measurement: | applied part with test voltage | test voltage polarity | measured voltage between Y1 and Y2 (mV) | remarks |
| | | | | | |
| | | | | | |
| No defibrillation approved applied parts. | | | | | |

| 17. h2) | TABLE: defibrillation-proof recovery time | | | N |
|---|---|---|---|---|
| applied part with test voltage | Test voltage polarity | recovery time from accompanying document(s) | Measured recovery time (s) | remarks |
| | | | | |
| | | | | |
| No defibrillation approved applied parts. | | | | |

| 18. | TABLE: protective earthing | | | P |
|---|---|---|---|---|
| test location | test current (A) | measured voltage (V) | resistance (Ω) | remarks |
| PE-pin of inlet to chassis | 25 | 0.48 | 0.019 | |

| IEC 60601-1 | | | |
|---|---|---|---|
| Clause | Requirement – Test | Result – Remark | Verdict |

| | | | | |
|---|---|---|---|---|
| PE-pin of inlet to chassis | 30 | 0.57 | 0.019 | |
| | | | | |
| | | | | |

| 19. | TABLE: leakage current | | | | P |
|---|---|---|---|---|---|
| type of leakage current and test condition (including single faults) | | supply voltage (V) | Supply frequency (Hz) | measured max. value (mA) | Remarks |
| Before humidity conditioning | | | | | |
| ER; NC | (Limited 0.5mA) | 250 +10% | 60 | 0.184 | S1=1; S5=1 or 0 |
| ER; SFC | (Limited 1.0mA) | 250 +10% | 60 | 0.381 | S1=0; S5=1 or 0 |
| EN; NC | (Limited 0.1mA) | 250 +10% | 60 | 0.005 | S1=S7=1; S5=1 or 0 |
| EN; SFC | (Limited 0.5mA) | 250 +10% | 60 | 0.005 | S1≠S7 or S1 = S7 = 0; S5 = 0 or 1; SFC [1),2)] of DC/AC inverter of LCD type computer |
| EN; SFC | (Limited 0.5mA) | 250 +10% | 60 | 0.005 | With 250V+10% on SIP and SOP |
| After humidity conditioning ( 2 days) | | | | | |
| ER; NC | (Limited 0.5mA) | 250 +10% | 60 | 0.185 | S1=1; S5=1 or 0 |
| ER; SFC | (Limited 1.0mA) | 250 +10% | 60 | 0.382 | S1=0; S5=1 or 0 |
| EN; NC | (Limited 0.1mA) | 250 +10% | 60 | 0.005 | S1=S7=1; S5=1 or 0 |
| EN; SFC | (Limited 0.5mA) | 250 +10% | 60 | 0.005 | S1≠S7 or S1 = S7 = 0; S5 = 0 or 1; SFC [1),2)] of DC/AC inverter of LCD type computer |
| EN; SFC | (Limited 0.5mA) | 250 +10% | 60 | 0.005 | With 250V+10% on SIP and SOP |
| (Record at least maximum measured value for each test required by Cl._19. And the specific conditions of the test circuit and equipment). | | | | | |

Abbreviations used:

ER - Earth leakage current
EN - Enclosure leakage current
P - Patient leakage current
Fig. 15 - refers to Fig. 15 in IEC 60601-1
MD - Measuring device

A - After humidity conditioning
B - Before humidity conditioning
1 - Switch closed or set to normal polarity
0 - Switch open or set to reversed polarity
NC - Normal condition
SFC - Single fault condition

| IEC 60601-1 | | | |
|---|---|---|---|
| Clause | Requirement – Test | Result – Remark | Verdict |

EN;SFC of DC/AC inverter of LCD type computer:

1).: High voltage lines of DC/AC inverter touch possible internal parts of LCD monitor, e.g. enclosure inside parts, conductive metal parts, other components. Max. enclosure leakage current was measured from the enclosure with touchable screen covered by metal foil.

2).: Measurement of DC/AV inverter o/p according to sub-clause 2.4 (Limited Current Circuit) of IEC 60950: 1991＋A1＋A2＋A3＋A4

Inverter: Lecerf Technology, type LV-17AA

NC : T1(pin11) to T1(pin7): 0.1mA＜35.8mA(51.28kHz)

CN2(pin1) to CN2(pin4): 14mA＜31.2mA(44.64kHz)

CN2(pin1) to Earth: 15mA＜32.62mA(46.3kHz)

CN2(pin4) to Earth: 3.3mA＜33.02mA(47.12kHz)

SFC: T1(pin11) to T1(pin7):

a. 0.07mA＜35.8mA (51.28kHz, with L1 s-c).

b. 45mA＜70mA (114.9kHz, with Q1(1-3) s-c).

c. 0mA, output shutdown (with R11 s-c).

d. 0.1mA＜35mA (50kHz, with Q5(C-E) s-c).

CN2(pin1) to CN2(pin4):

a. 18mA＜30.7mA (43.86kHz, with L1 s-c).

b. 13mA＜31.25mA (44.64kHz, with Q1(1-3) s-c).

c. 0mA, output shutdown (with R11 s-c).

d. 0.1mA＜30.4mA (43.48kHz, with Q5(C-E) s-c).

CN2(pin1) to Earth:

a. 0.2mA＜32.7mA (46.73kHz, with L1 s-c).

b. 13.4mA＜31.54mA (45.05kHz, with Q1(1-3) s-c).

c. 0mA, output shutdown (with R11 s-c).

d. 0.1mA＜35mA (50kHz, with Q5(C-E) s-c).

CN2(pin4) to Earth:

a. 0, output shutdown (with L1 s-c).

b. 2.5mA＜33.3mA (47.62kHz, with Q1(1-3) s-c).

c. 0mA, output shutdown (with R11 s-c).

d. 0mA, output shutdown (50kHz, with Q5(C-E) s-c).

(Output measured with a 2kΩ non-inductive resistor as load.)

| 20. | TABLE: dielectric strength | | | P |
|---|---|---|---|---|
| insulation under test (area from insulation diagram) | insulation type: (OP-operational/BI-basic/ SI-supplementary/DI-double/ RI-reinforced | reference voltage (V) | test voltage (V) | Remarks |
| BEFORE MOISTURE TREATMENT | | | | |

| IEC 60601-1 | | | |
|---|---|---|---|
| Clause | Requirement – Test | Result – Remark | Verdict |

| | | | | |
|---|---|---|---|---|
| A-f<br>Line to Neutral | Basic insulation | 250 V | 1500Va.c. | No breakdown. |
| A-a1<br>Live parts to PE | Basic insulation | 250 V | 1500Va.c. | No breakdown. |
| A-a2<br>Live parts to enclosure | Basic insulation + Supplementary insulation / Double insulation Reinforced insulation | 250 V | 4000Va.c. | No breakdown. |
| A-e<br>Live parts to SIP/SOP | Basic insulation + Supplementary insulation / Double insulation Reinforced insulation | 250 V | 4000Va.c. | No breakdown. |
| A-k<br>SIP/SOP to enclosure | Basic insulation + Supplementary insulation / Double insulation Reinforced insulation | 250 V | 4000Va.c. | No breakdown. |
| AFTER MOISTURE TREATMENT (48 hrs) | | | | |
| A-f<br>Line to Neutral | Basic insulation | 250 V | 1500Va.c. | No breakdown. |
| A-a1<br>Primary to PE | Basic insulation | 250 V | 1500Va.c. | No breakdown. |
| A-a2<br>Primary to enclosure | Basic insulation + Supplementary insulation / Double insulation Reinforced insulation | 250 V | 4000Va.c. | No breakdown. |
| A-e<br>Live parts to SIP/SOP | Basic insulation + Supplementary insulation / Double insulation Reinforced insulation | 250 V | 4000Va.c. | No breakdown. |
| A-k<br>SIP/SOP to enclosure | Basic insulation + Supplementary insulation / Double insulation Reinforced insulation | 250 V | 4000Va.c. | No breakdown. |
| | | | | |

| 21. | TABLE: mechanical strength | P |
|---|---|---|
| part under test | test (impact, drop, force, handle, rough handling, mobile) | remarks |
| Enclosure | Steady force test | Close to LCD panel |
| Enclosure | Impact test | Close to LCD panel |
| Unit | Drop test | Height: 5cm |

| IEC 60601-1 | | | |
|---|---|---|---|
| Clause | Requirement – Test | Result – Remark | Verdict |

| | | | |
|---|---|---|---|
| 24. | TABLE: stability | | P |
| part under test | test condition | Remarks | |
| LCD Type Computer | 10° tilted in worst condition. | The LCD type computer does not overbalance. | |

| | | | | |
|---|---|---|---|---|
| 29. | TABLE: X-radiation | | | N |
| part under test | test condition | Measured radiation (mR) | remarks | |
| | | | | |

| | | | | |
|---|---|---|---|---|
| 42. | TABLE: normal temperature | | | P |
| | supply voltage.....: | AC 100V-10% at 60Hz/ 250V+10% at 50Hz | | — |
| | ambient temperature °C .....: | See below | | — |
| | test condition .....: | See below | | — |
| measuring location | | Measured temp. T (°C) | | Allowed max. temp. T (°C) |
| Model: POC-173XX-AC-XX | | | | |
| On SPS Board | | | | |
| L1 coil | | 75 | 59 | 90 |
| T1 coil | | 84 | 84 | 105 |
| On DC/AC inverter Board | | | | |
| T1 coil | | 74 | 74 | 90 |
| L1 coil | | 63 | 62 | 90 |
| PCB under U1 | | 51 | 51 | 90 |
| Computer | | | | |

| IEC 60601-1 | | | |
|---|---|---|---|
| Clause | Requirement – Test | Result – Remark | Verdict |

| | | | |
|---|---|---|---|
| Enclosure of Computer | 35 | 35 | 70 |
| Room ambient air (in °C ) | 25 | 25 | -- |

The maximum specified ambient temperature is 40°C.

Winding components:

- class B → Tmax = 130-10*-(40-25) = 105 (°C)

Electrolyte capacitor and component with:

- max. temp. of 105°C → Tmax = 105-(40-25) = 90 (°C)

Touchable surfaces with:

- max. temperature of 85°C → Tmax = 85-(40-25) = 70 (°C)

Note:

An asterisk indicates a mark which refer to IEC 60950: 1991 + A1 + A2 + A3 + A4 sub-clause 5.1 condition A "If temperature rises of windings are determined by thermocouples, these figure are reduced by 10 K except in case of motors."

The temperatures were measured under worst case normal is defined with max. brightness/contrast , the max. horizontal frequency of the monitor and USB connection.

| 44. | TABLE: overflow, spillage, leakage, humidity, ingress of liquids, cleaning, sterilization, disinfection | P |
|---|---|---|

| test type and condition | part under test | Remarks |
|---|---|---|
| R.H. (48hrs, 95%, 25°C) | PCB, unit. | |
| | | |

| 45. | TABLE: hydrostatic pressure and pressure-relief device cycling test | N |
|---|---|---|

| test type and condition | part under test | test pressure | Remarks |
|---|---|---|---|
| | | | |
| | | | |

| 52. | TABLE: abnormal operation | P |
|---|---|---|

| test type, condition and clause reference | observed results | Remarks (test time) |
|---|---|---|

| IEC 60601-1 | | | |
|---|---|---|---|
| Clause | Requirement – Test | Result – Remark | Verdict |

| Component | Fault | | |
|---|---|---|---|
| CPU Fan and System Fan | Locked | a. T1 coil of inverter: 77°C<br>b. L1 coil of inverter: 65°C<br>c. L1 coil of SPS: 61°C<br>d. T1 coil of SPS: 80°C<br>Ambient: 25°C, no hazards. | 1.0hrs |
| Ventilation openings | Blocked | a. T1 coil of inverter: 61°C<br>b. L1 coil of inverter: 73°C<br>c. L1 coil of SPS: 58°C<br>d. T1 coil of SPS: 81°C<br>Ambient: 25°C, no hazards. | 1.0hrs |
| R307<br>(in Lithium Battery circuit) | Shorted | Abnormal reverse current = 0, no hazards. | -- |
| D17<br>(in Lithium Battery circuit) | Shorted | Abnormal reverse current = 0.24mA, no hazards. | -- |
| | | | |

| 56.1 | TABLE: lists of critical component parts | | | | P |
|---|---|---|---|---|---|
| object/part No. | manufacturer/ trademark | type/model | Technical data | Standard | mark(s) of conformity[1]) |
| PCB | -- | -- | V-1 or better, 105°C min. | UL94 | UL |
| Enclosure material | Chi Mei | PA-765A | V-0, 85°C | UL 94 | UL |
| LCD Panel | Acer Display Technology Inc. | L170E3 | TFT type, 17.0" | -- | -- |
| | AU Optronics Corp. | M170EN05 | TFT type, 17.0" | -- | -- |
| HDD Drive | Fujitsu | MHN2200AT | 5Vdc, 1A max. | EN 60950 | TÜV, UL, CSA |
| FDD Drive (Optional) | NEC | FD1238T | 5Vdc, 1A max. | EN 60950 | TÜV, UL, CSA |
| CD / DVD-ROM / CD-RW Drive (Optional) | Toshiba Corp. | XM-7004Bxx, XM-1902Bxx x=0-9 | 5Vdc, 0.9A Laser Class I | IEC 60950 IEC 60825-1 | TÜV, UL, CSA |
| | Quanta Storage Inc. | SCR-242 | 5Vdc, 1.5A Laser Class I | IEC 60950 IEC 60825-1 | TÜV, UL, CSA |
| | Quanta Storage Inc. | SDR-XXXX | 5Vdc, 1.8A max. Laser Class I | IEC 60950 IEC 60825-1 | TÜV, UL, CSA |

| IEC 60601-1 | | | |
|---|---|---|---|
| Clause | Requirement – Test | Result – Remark | Verdict |

| | | | | | |
|---|---|---|---|---|---|
| | Matsushita | SR-8175-C, SR-8176-C | 5Vdc, 1.8A max. Laser Class I | IEC 60950 IEC 60825-1 | TÜV, UL, CSA |
| | Matsushita | UJDA330 | 5Vdc, 1.8A max. Laser Class I | IEC 60950 IEC 60825-1 | TÜV, UL, CSA |
| Appliance Inlet | Supercom | SC-8 | 10A, 250Vac | VDE 0625-1 | VDE, S, UL |
| | Supercom | SC-9 | 10A, 250Vac | VDE 0625-1 | VDE, S, UL |
| | Inalways | 0711 | 10A, 250Vac | VDE 0625-1 | VDE, S, UL |
| | Rong Feng | SS-130, SS-7B | 10A, 250Vac | VDE 0625-1 | VDE, S, UL |
| Power Switch | Solteam | MR-21 | 6A, 250V | IEC 61058-1 | VDE, S, UL |
| Inverter | Lecerf Technology Co., Ltd. | LV-17AA | I/P: 13V, 2600mA, max. O/P: 1300Vrms | -- | -- |
| Inverter transformer | Lecerf Technology Co., Ltd. | X08 | Class 105°C | -- | -- |
| Poly switch (for USB) | Raychem | SMD150-2018 | 1.10A, 5V | IEC 60730-1 | TÜV, UL |
| Lithium Battery (Reverse current protection by series circuit of diode and resistor, rated 1kΩ) | Rayovac | BR2032 | 3 V, 195 mAh. Max. Abnormal Charging Current 4 mA | -- | UL |
| DC Fan for CPU | Y.S. Tech | FD1260107B-2A | 12Vdc, 0.14A, 16.5 CFM | IEC 60950 | TÜV, UL |
| System Fan | Y.S. Tech | FD1240105B-2A | 12Vdc, 0.08A, 5.8 CFM | IEC 60950 | TÜV, UL |
| Internal Power Supply | Skynet | SNP-8086-M | I/P: 100-250 Vac, 50/60 Hz, 3A; O/P: DC 5V/12A, 12V/1A | IEC 60601-1 | TÜV, CB (issued by Nemko) |

[1]) an asterisk indicates a mark which assures the agreed level of surveillance

| 56.10 | TABLE: actuating parts and controls | N |
|---|---|---|
| part under test | torque applied | Remarks |

| IEC 60601-1 | | | |
|---|---|---|---|
| Clause | Requirement – Test | Result – Remark | Verdict |

| | | |
|---|---|---|
| | | |
| | | |

| 56.11 b) | TABLE: foot-operated control devices loading | N |
|---|---|---|
| + part under test | observed results | Remarks |
| | | |
| | | |

| 57.4 | TABLE: cord anchorages | | | | N |
|---|---|---|---|---|---|
| cord under test | mass of equipment | pull | torque | remarks | Verdict |
| | | | | | |
| | | | | | |

| 57.4 b) | TABLE: cord bending | | N |
|---|---|---|---|
| cord under test | test mass | measured curvature | Remarks |
| | | | |
| | | | |

| 57.9.1 a) | TABLE: transformers **short-circuit** | | | | N |
|---|---|---|---|---|---|
| winding under test | Protection | measured temperatures (°C ) | | test duration | Remarks |
| | | T1 coil | ambient | | |
| | | | | | |
| Note:<br>Approved SPS used. | | | | | |

| 57.9.1 b) | TABLE: **overload** | | | N |
|---|---|---|---|---|
| winding under test | Protection | measured temperatures (°C) | test duration | Remarks |

| IEC 60601-1 | | | |
|---|---|---|---|
| Clause | Requirement – Test | Result – Remark | Verdict |

| | | Primary[1)] | Secondary T1 | ambient | | |
|---|---|---|---|---|---|---|
| | | | | | | |
| | | | | | | |

| 57.9.2 | TABLE: transformer dielectric strength | | | | N |
|---|---|---|---|---|---|
| transformer under test | test voltage applied to | test voltage | test frequency | Remarks | |
| | | | | | |
| Note:<br>Approved SPS used. | | | | | |

| 59.2 | TABLE: ball pressure tests | | | P |
|---|---|---|---|---|
| part/material | Temperature of this part from sub-clause 42 (°C) | Test temperature (°C) | Impression diameter(mm) | |
| Enclosure (Chi Mei, type PA-765A) | 35 | 90 [1)] | 1.3 | |
| Note:<br>1. The temperature requirement of IEC 60601-1 is 75°C, however, by client's request, performed at 90°C. | | | | |

Attachment 1 : DC-AC inverter circuit

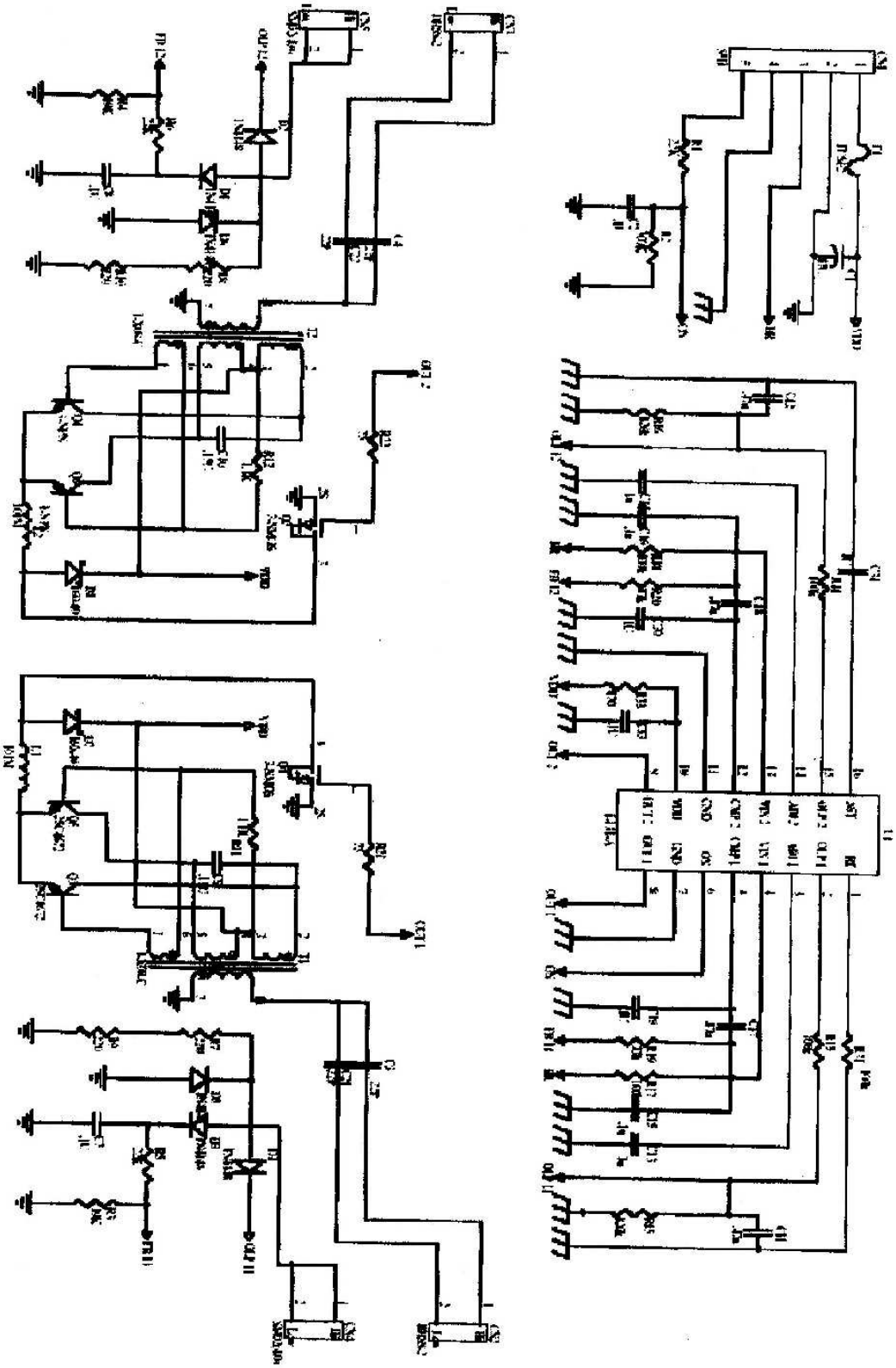

Attachment 2: USB Port Circuit

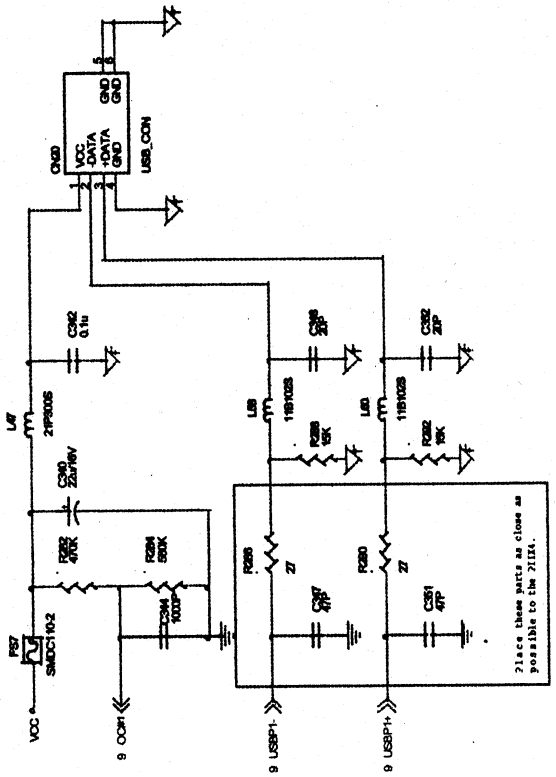


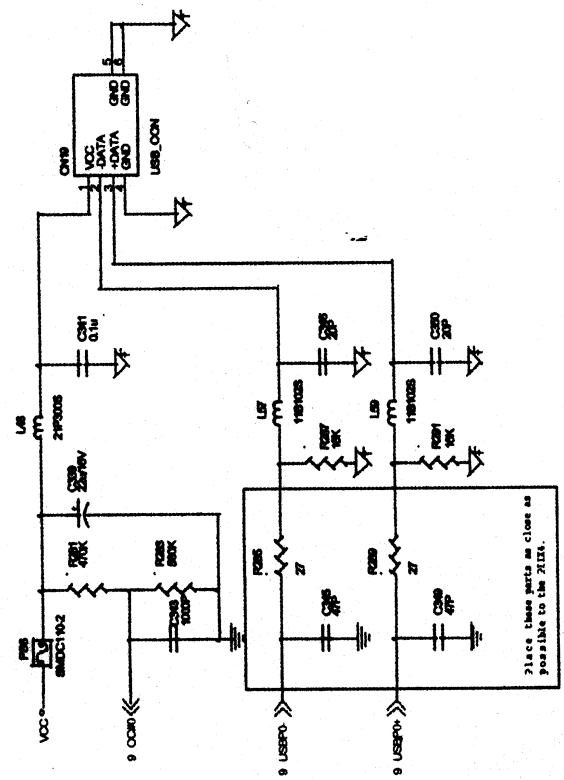

Attachment 3: DC-DC Converter Circuit

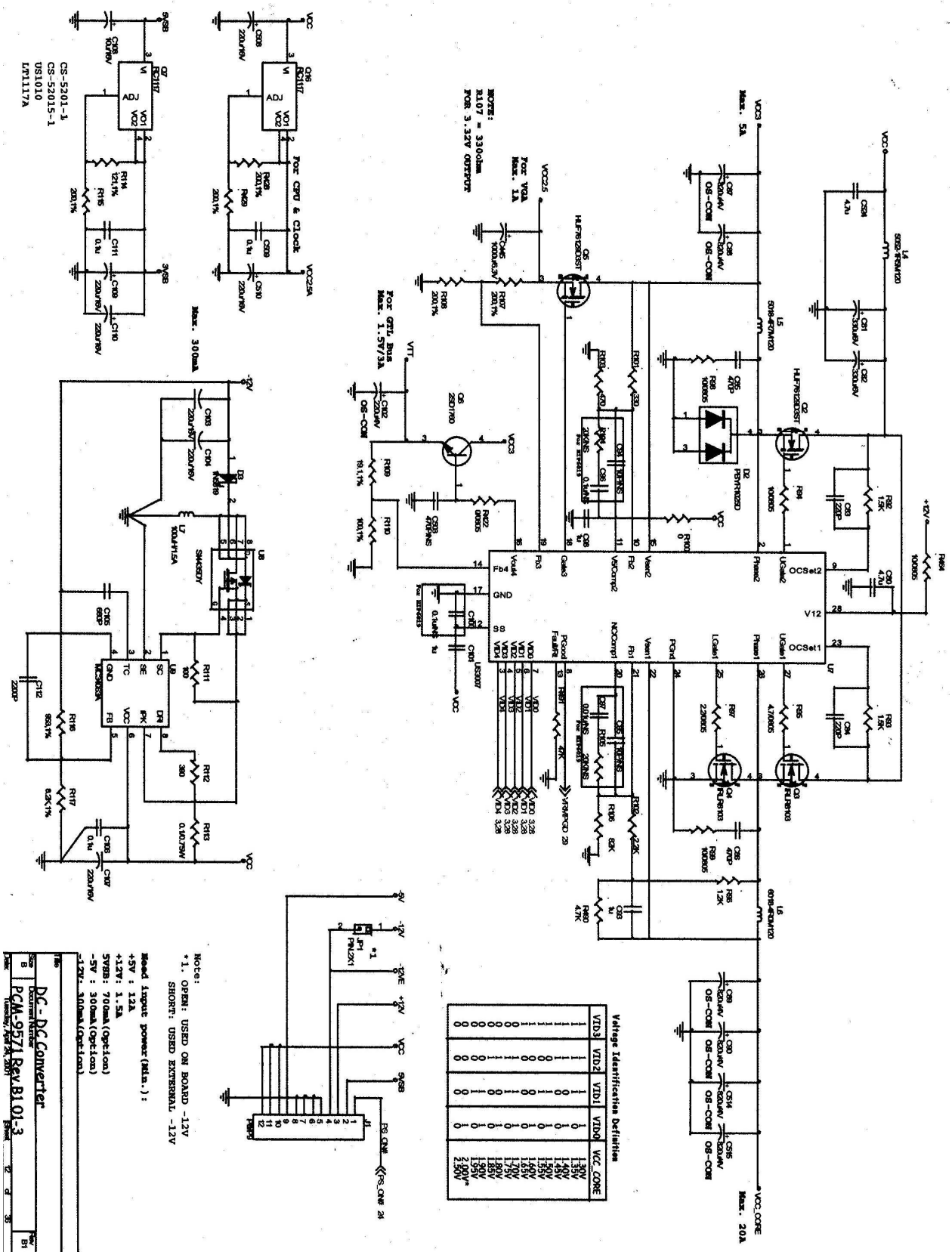

Type Designation: POC-173XX-AC-XX
(Where the X can be any alphanumeric character or blank)

Report Number: 21104410 001

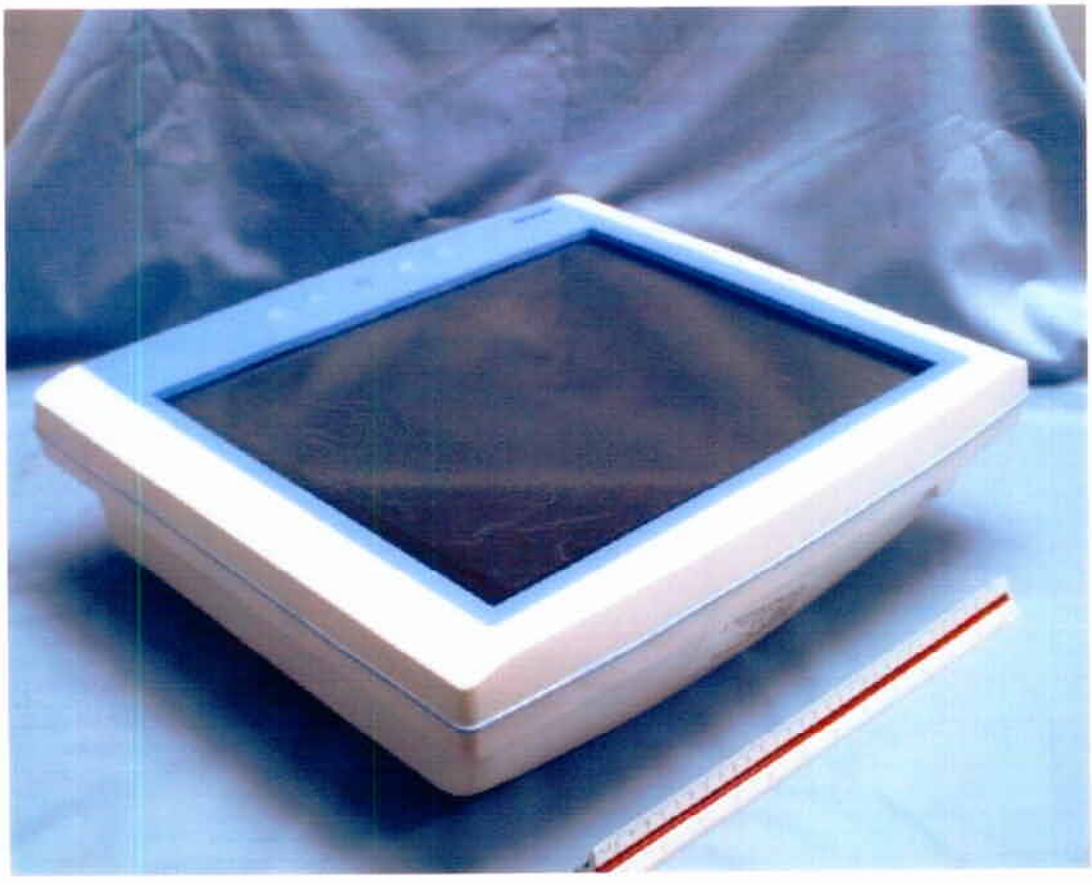

Type Designation: POC-173XX-AC-XX
(Where the X can be any alphanumeric character or blank)

Report Number: 21104410 001

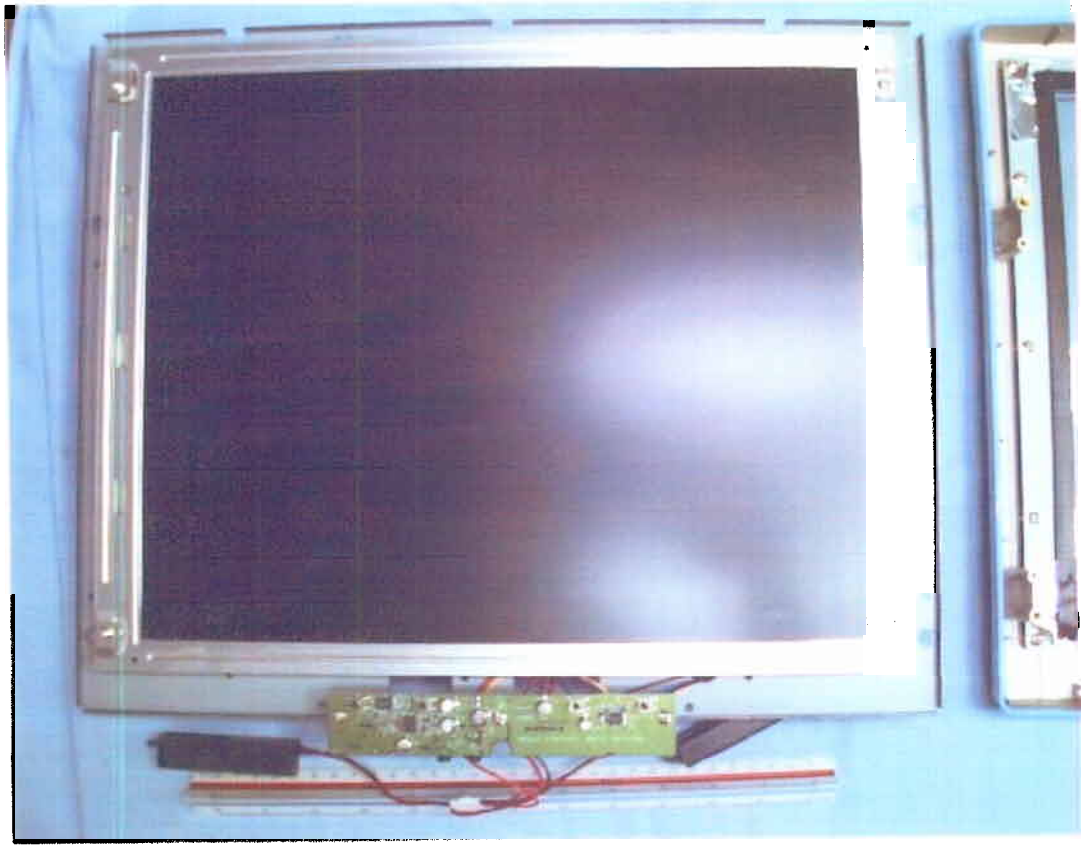

**Type Designation:** POC-173XX-AC-XX
(Where the X can be any alphanumeric character or blank)

**Report Number:** 21104410 001

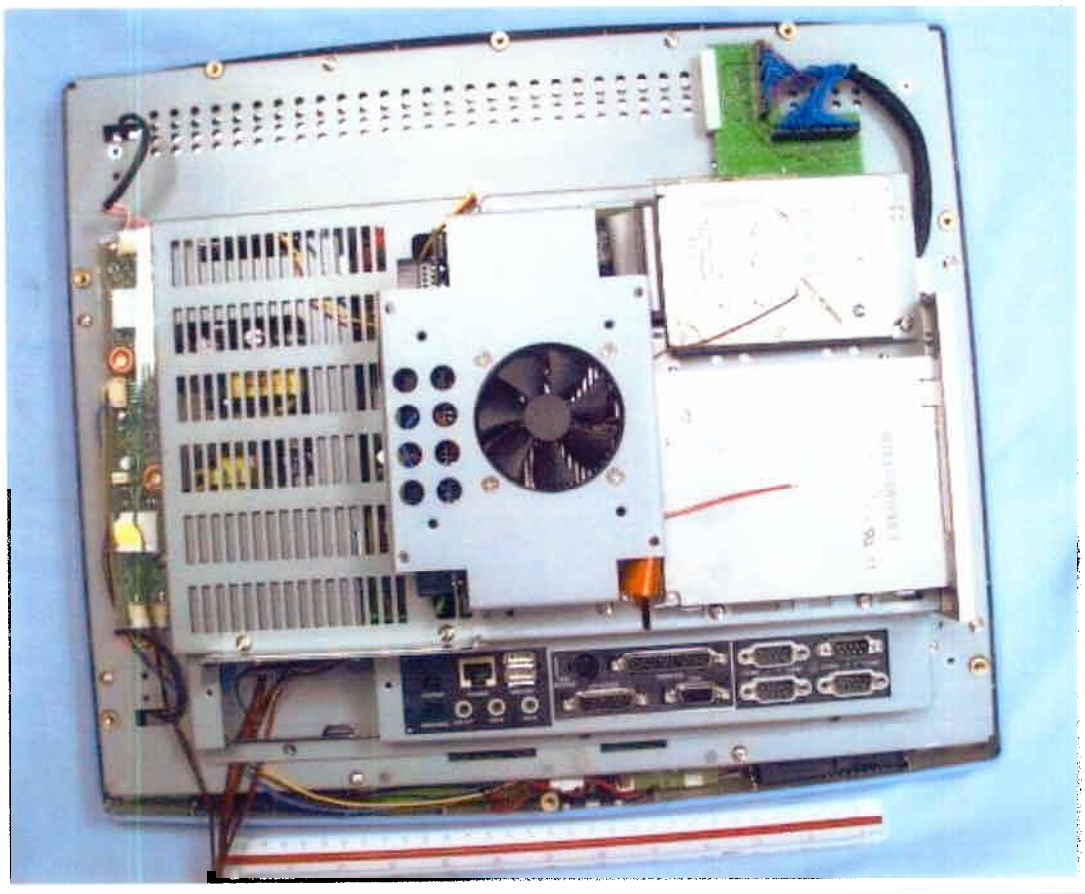

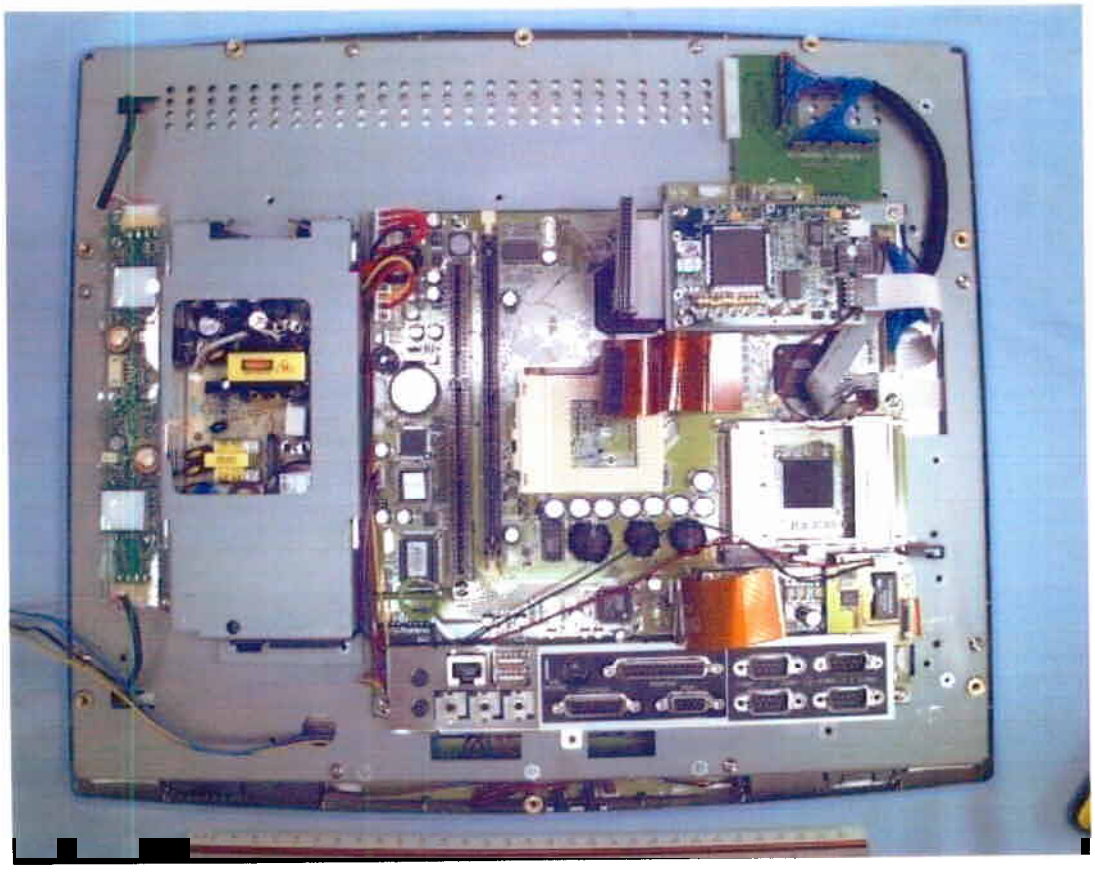

Type Designation: POC-173XX-AC-XX
(Where the X can be any alphanumeric character or blank)

Report Number: 21104410 001