EMC UPDATE TEST REPORT

For

Advantech Co., Ltd.

Panel PC; **Panel PC with Touch Screen

Model: POC-153T

Trade Name: ADVANTECH

Date of Test: January 02, 2004

Revision: 01

Description of Rev. 01:

1. Applicant changes product name (Panel PC to Panel with Touch Screen).
   (Please refer to have ** mark items on this report)
2. Applicant adds one LCD Panel to re-test.
   (Please refer to have ** mark items on this report)
3. Other information, please refer to the B30804209 and this test report.

Approved by:

Kurt Chen
Director of Linkou Laboratory
Compliance Certification Services Inc.

Reviewed by:

Jessie Wang
Section Manager of Linkou Laboratory
Compliance Certification Services Inc.

Note: *This report shall not be reproduced except in full, without the written approval of Compliance Certification Services Inc. Ltd. This document may be altered or revised by Compliance Certification Services Inc. personnel only, and shall be noted in the revision section of the document.*

TABLE OF CONTENTS

1 TEST RESULT CERTIFICATION 3
2 EUT DESCRIPTION 4
3 TEST METHODOLOGY 4
3.1 DECISION OF FINAL TEST MODE 5
4 SETUP OF EQUIPMENT UNDER TEST 6
5 INSTRUMENT AND CALIBRATION 7
51 MEASURING INSTRUMENT CALIBRATION 7
5.2 TEST AND MEASUREMENT EQUIPMENT 7
6 TEST RESULTS 10
7 POWER HARMONICS TEST 14
8 POWER VOLTAGE FLUCTUATION / FLICKER TEST 16
9 ELECTROSTATIC DISCHARGE (ESD) IMMUNITY TEST 18
10 RADIATED ELECTROMAGNETIC FIELD IMMUNITY TEST 22
11 FAST TRANSIENTS/BURST IMMUNITY TEST 26
12 SURGE IMMUNITY TEST 28
13 CONDUCTED DISTRBANCE/INDUCED RADIO-FREQUENCY FIELD IMMUNITY TEST 30
14 POWER FREQUENCY MAGNETIC FIELD IMMUNITY TEST 32
15 VOLTAGE DIPS / SHORT INTERRUPTIONS 34
APPENDIX I – PHOTOGRAPHS OF TEST SETUP 36
APPENDIX II – TEST RESULT OF EN 61000-3-2/-3 46

1 TEST RESULT CERTIFICATION

Applicant:	**Advantech Co., Ltd.** No. 1, Alley 20, Lane 26, Rueiguang Road, Neihu District, Taipei 114, Taiwan, R.O.C.
Manufacturer:	**Advantech Co., Ltd.** No. 1, Alley 20, Lane 26, Rueiguang Road, Neihu District, Taipei 114, Taiwan, R.O.C.
Equipment Under Test:	Panel PC; **Panel PC with Touch Screen
Trade Name:	ADVANTECH
Model:	POC-153T
Detailed EUT Description:	See Item 2 of this report
Date of Test:	January 02, 2004

Applicable Standard	Class/Limit/Criterion	Test Result
EN 55022: 1998	Class B	No non-compliance noted
EN 61000-3-2: 2000	Class D	Please refer to page 15
EN 61000-3-3: 1995 + A1: 2001	Limit	No non-compliance noted
EN 55024: 1998, including		
IEC 61000-4-2: 1995 + A2: 2000	Criterion B	No non-compliance noted
IEC 61000-4-3: 1995 + A2: 2000	Criterion A	No non-compliance noted
IEC 61000-4-4: 1995 + A1: 2000	Criterion B	No non-compliance noted
IEC 61000-4-5: 1995 + A1: 2000	Criterion B	No non-compliance noted
IEC 61000-4-6: 1996 + A1: 2000	Criterion A	No non-compliance noted
IEC 61000-4-8: 1993 + A1: 2000	Criterion A	No non-compliance noted
IEC 61000-4-11: 1994 + A1: 2000	Criterion B/C/C	No non-compliance noted
Deviation from Applicable Standard		
None		

The above equipment was tested by Compliance Certification Services Inc. for compliance with the requirements set forth in the EMC Directive 89/336/EMC and the technical standards mentioned above. The results of testing in this report apply only to the product/system, which was tested. Other similar equipment will not necessarily produce the same results due to production tolerance and measurement uncertainties.

2 EUT DESCRIPTION

Product	Panel PC; **Panel PC with Touch Screen		
Trade Name	ADVANTECH		
Model	POC-153T		
Housing Type	Plastic		
Power Supply Manufacturer	SKYNET	**Model**	SNP-8086
Power Supply Power Rating	100-240VAC, 50-60Hz		
AC Power Cord Type	Unshielded, 1.8m (Detachable) to Power Adapter		
CPU Manufacturer	Intel	**Model**	PIII 1.26GHz
CPU Board Manufacturer	Adventech	**Model**	PCM-9673
OSC/Clock Frequencies	133MHz		
Memory Capacity		**Installed**	256MB SDRAM
LCD Panel Manufacturer	CHUNG HWA	**Model**	13012751W
**	AU	**Model**	M150XN07
HDD Manufacturer	Fujitsu	**Model**	MHN2200AT
FDD Manufacturer	NEC	**Model**	FD1238T
CD-ROM Manufacturer	QSI	**Model**	SCR-242

I/O Port of EUT

I/O PORT TYPES	*Q'TY*	*TESTED WITH*
1). Parallel Port	*1*	*1*
2). Serial Port	*4*	*4*
3). Video Out Port (VGA)	*1*	*1*
4). PS/2 Keyboard/ Mouse Port	*1*	*1*
5). Line In Port	*1*	*1*
6). Line Out Port	*1*	*1*
7). Microphone Port	*1*	*1*
8). Game Port	*1*	*1*
9). LAN Port	*1*	*1*
10).USB Port	*2*	*2*

3 TEST METHODOLOGY

3.1 DECISION OF FINAL TEST MODE

1. The following test mode(s) were scanned during the preliminary test:

   Mode 1
   1024 X 768 Resolution / 100Mbps with AU / M150XN07 LCD Panel

   Mode 2
   800 X 600 Resolution / 100Mbps with AU / M150XN07 LCD Panel

   Mode 3
   640 X 480 Resolution / 100Mbps with AU / M150XN07 LCD Panel

2. After pre-scan, found mode 1 producing the highest emission level, used this mode for all final test.

4 SETUP OF EQUIPMENT UNDER TEST

Setup Diagram

See test photographs attached in Appendix 1 for the actual connections between EUT and support equipment.

Support Equipment

No.	Equipment	Model No.	Serial No.	FCC ID	Trade Name	Data Cable	Power Cord
1.	Monitor	959NF	AQ19H2RT706132L	FCC DoC	FCC DoC	Shielded, 1.8m with two cores	Unshielded, 1.8m
2.	Modem	DM-1414	0304012269	IFAXDM1414	ACEEX	Shielded, 1.5m	Unshielded, 1.8m
3.	Modem	DM-1414	0304012264	IFAXDM1414	ACEEX	Shielded, 1.5m	Unshielded, 1.8m
4.	Printer	STYLUS C60	STYLUS C60	DR3K039425	EPSON	Shielded, 1.5m	Unshielded, 1.8m
5.	PS/2 Keyboard (One to two adapter)	KB-0133	N/A	FCC DoC	Compaq	Shielded, 1.8m	N/A
6.	PS/2 Mouse (One to two adapter)	M-S69	N/A	FCC DoC	Compaq	Shielded, 1.8m	N/A
7.	Mouse	M-MM43	LZE93352988	FCC DoC	Logitech	Shielded, 1.8m	N/A
8.	Mouse	M-MM43	LZE94052791	FCC DoC	Logitech	Shielded, 1.8m	N/A
9.	USB 2.0 External HDD	F12-U	A0100214-31d0014	FCC DoC	TeraSyS	Shielded, 1.8m	N/A
10.	USB 2.0 External HDD	F12-U	A0100214-31d0028	FCC DoC	TeraSyS	Shielded, 1.8m	N/A
11.	Joystick	G-ZA-PHI	PHB01600992	FCC DoC	Logitech	Shielded, 1.8m	N/A
12.	Multimedia Earphone	Axis-301	N/A	FCC DoC	Labtec	Unshielded, 1.8m	N/A
13.	Walkman	RQ-L10	HB004471	FCC DoC	Panasonic	Unshielded, 1.8m	N/A
14.	Notebook PC (Remote)	M285	NU2503589	FCC DoC	LEO	LAN Cable: Unshielded, 10m	AC I/P: Unshielded, 1.8m DC O/P: Unshielded, 1.8m with a core

Note: *All the above equipment/cables were placed in worse case positions to maximize emission signals during emission test.*

Grounding: *Grounding was in accordance with the manufacturer's requirements and conditions for the intended use.*

5 INSTRUMENT AND CALIBRATION

51 MEASURING INSTRUMENT CALIBRATION

The measuring equipment utilized to perform the tests documented in this report has been calibrated once a year or in accordance with the manufacturer's recommendations, and is traceable to recognized national standards.

5.2 TEST AND MEASUREMENT EQUIPMENT

The following list contains measurement equipment used for testing. The equipment conforms to the requirement of CISPR 16-1, ANSI C63.2 and other required standards.

Calibration of all test and measurement, including any accessories that may effect such calibration, is checked frequently to ensure the accuracy. Adjustments are made and correction factors are applied in accordance with the instructions contained in the respective manual.

Equipment Used for Emission Measurement

Conducted Emission Test Site # 3				
Name of Equipment	**Manufacturer**	**Model**	**Serial Number**	**Calibration Due**
EMI Test Receiver	R&S	ESHS30	828144/003	08/07/2004
LISN	R&S	ESH2-Z5	843285/010	01/19/2004
LISN	EMCO	3825/2	9003-1628	07/27/2004
Spectrum Analyzer	ADVANTEST	R3261C	81720301	N.C.R
ISN	FCC	FCC-TLISN-T4	20065	05/08/2004

Note: *The measurement uncertainty is less than +/- 2.83dB, which is evaluated as per the NAMAS NIS 81 and CISPR/A/291/CDV.*

Open Area Test Site # 4				
Name of Equipment	**Manufacturer**	**Model**	**Serial Number**	**Calibration Due**
Spectrum Analyzer	ADVANTEST	R3132	91700456	N.C.R
EMI Test Receiver	R&S	ESVS10	846285/016	04/10/2004
Bilog Antenna	CHASE	CBL 6112B	2462	01/10/2004
Turn Table	Chance most	N/A	N/A	N.C.R
Antenna Tower	Chance most	N/A	N/A	N.C.R
Controller	Chance most	N/A	N/A	N.C.R
RF Switch	ANRITSU	MP59B	M51067	N.C.R
Site NSA	C&C Lab.	N/A	N/A	08/08/2004

Note: *The measurement uncertainty is less than +/- 3.36dB, which is evaluated as per the NAMAS NIS 81 and CISPR/A/291/CDV.*

Power Harmonic & Voltage Fluctuation/Flicker Measurement (EN 61000-3-2&-3-3)				
Name of Equipment	**Manufacturer**	**Model**	**Serial Number**	**Calibration Due**
HARMONICS SYSTEM	EMC-PARTNER	HARMONICS-1 000	094	10/26/2004

Equipment Used for Immunity Measurement

ESD Test Site (IEC/EN 61000-4-2)				
Name of Equipment	**Manufacturer**	**Model**	**Serial Number**	**Calibration Due**
ESD Generator	EM TEST	P30C	0603-01	02/26/2004

Radiated Electromagnetic Field Immunity Test Site (IEC/EN 61000-4-3)				
Name of Equipment	**Manufacturer**	**Model**	**Serial Number**	**Calibration Due**
S.G.	R&S	SMY02	100094	08/05/2004
Power Meter	R&S	NRVD	837794/029	N.C.R.
Power Amplifier	ar	150W1000	300300	N.C.R
Power Antenna	EMCO	93141	9712-1083	N.C.R
EM PROBE	GW	EMR-30	L-0013	06/04/2004

Fast Transients/Burst Test Site (IEC/EN 61000-4-4)				
Name of Equipment	**Manufacturer**	**Model**	**Serial Number**	**Calibration Due**
Fast Transients/Burst Generator	HAEFELY TRENCH	PEFT- JUNIOR	583 333-117	08/19/2004
Clamp	HAEFELY TRENCH	093 506.1	080 421.13	N.C.R

Surge Immunity Test Site (IEC/EN 61000-4-5)				
Name of Equipment	**Manufacturer**	**Model**	**Serial Number**	**Calibration Due**
Surge Tester	HAEFELY TRENCH	PSUGER 4010	583 334-71	08/19/2004

CS Test Site (IEC/EN 61000-4-6)				
Name of Equipment	**Manufacturer**	**Model**	**Serial Number**	**Calibration Due**
S.G.	R&S	SMY02	100094	08/05/2004
Power Meter	R&S	NRVD	837794/029	N.C.R.
Power Amplifier	ar	500A100A	300299	N.C.R
CDN	Lüthi	801-M3	1879	02/25/2004
CDN	FRANKONIA	CDN-M2	A3002010	04/27/2004
CDN	SCHAFFNER	T400	16906	12/28/2004

Power Frequency Magnetic Field Immunity Test Site (IEC/EN 61000-4-8)				
Name of Equipment	**Manufacturer**	**Model**	**Serial Number**	**Calibration Due**
TRIAX ELF Magnetic Field Meter	F.W.BELL	4090	9711	11/13/2004
Clamp Meter	National	300K	11-5980 K	12/04/2004
Magnetic Field Tester	HAEFELY TRENCH	MAG 100.1	080 938-01	N.C.R

Voltage Dips/Short Interruption and Voltage Variation Immunity Test Site (IEC/EN 61000-4-11)				
Name of Equipment	**Manufacturer**	**Model**	**Serial Number**	**Calibration Due**
Dips/Interruption and Variations Simulator	HAEFELY TRENCH	PLINE 1610	080 344-05	03/27/2004

6 TEST RESULTS

Line Conducted Emission

Model: POC-153T **Test Mode:** Mode 1

Temperature: 17°C **Humidity:** 67% RH

Tested by: Ethan Huang **Test Results:** Pass

(The chart below shows the highest readings taken from the final data)

Freq. (MHz)	Q.P. Raw (dBuV)	AVG Raw (dBuV)	Q.P. Limit (dBuV)	AVG Limit (dBuV)	Q.P. Margin (dB)	AVG Margin (dB)	NOTE
0.195	45.30	---	63.82	53.82	-18.52	---	L1
1.927	40.00	---	56.00	46.00	-16.00	---	L1
2.369	39.30	---	56.00	46.00	-16.70	---	L1
4.000	35.60	---	56.00	46.00	-20.40	---	L1
14.728	31.60	---	60.00	50.00	-28.40	---	L1
16.229	35.90	---	60.00	50.00	-24.10	---	L1
0.195	45.40	---	63.82	53.82	-18.42	---	L2
2.318	38.70	---	56.00	46.00	-17.30	---	L2
3.294	37.00	---	56.00	46.00	-19.00	---	L2
4.057	35.10	---	56.00	46.00	-20.90	---	L2
14.701	49.40	46.10	60.00	50.00	-10.60	-3.90	L2
16.227	49.70	46.50	60.00	50.00	-10.30	-3.50	L2

L1 = Line One (Live Line) / L2 = Line Two (Neutral Line)

Note: *"---" denotes the emission level was or more than 2dB below the Average limit, so no re-check anymore.*

Common Mode Conducted Emission

Model: POC-153T **Test Mode:** Mode 1

Temperature: 17°C **Humidity:** 67% RH

Tested by: Ethan Huang **Test Results:** Pass

(The chart below shows the highest readings taken from the final data)

Freq. (MHz)	Q.P. Raw (dBuV)	AVG Raw (dBuV)	Q.P. Limit (dBuV)	AVG Limit (dBuV)	Q.P. Margin (dB)	AVG Margin (dB)	NOTE
0.155	36.50	---	83.73	73.73	-47.23	---	10Base
14.151	64.10	60.80	74.00	64.00	-9.90	-3.20	10Base
14.701	62.20	59.80	74.00	64.00	-11.80	-4.20	10Base
16.227	64.30	62.00	74.00	64.00	-9.70	-2.00	10Base
18.244	62.90	62.00	74.00	64.00	-11.10	-2.00	10Base
19.708	65.10	62.00	74.00	64.00	-8.90	-2.00	10Base
0.155	69.90	---	83.73	73.73	-13.83	---	100Base
0.932	57.00	---	74.00	64.00	-17.00	---	100Base
11.893	63.30	61.20	74.00	64.00	-10.70	-2.80	100Base
13.419	63.50	60.80	74.00	64.00	-10.50	-3.20	100Base
16.160	66.20	62.00	74.00	64.00	-7.80	-2.00	100Base
18.244	66.40	62.00	74.00	64.00	-7.60	-2.00	100Base

L1 = Line One (Live Line) / L2 = Line Two (Neutral Line)

Note: *"---" denotes the emission level was or more than 2dB below the Average limit, so no re-check anymore.*

Radiated Emission (A)

Model: POC-153T **Test Mode:** Mode 1

Temperature: 24°C **Humidity:** 60% RH

Detector Function: Quasi-peak. **Antenna:** Vertical at 10m

Tested by: Max Yan **Test Results:** Pass

(The chart below shows the highest readings taken from the final data)

Freq. (MHz)	Raw Data (dBuV)	Corr. Factor (dB/m)	Emiss. Level (dBuV/m)	Limits (dBuV/m)	Margin (dB)
110.55	13.9	14.1	28.0	30.0	-2.0
133.37	11.2	14.2	25.4	30.0	-4.6
177.98	14.8	12.3	27.1	30.0	-2.9
181.82	10.2	12.2	22.4	30.0	-7.6
204.18	10.8	12.7	23.5	30.0	-6.5
211.20	12.0	12.8	24.8	30.0	-5.2
227.30	10.2	13.2	23.4	30.0	-6.6
259.76	14.8	17.1	31.9	37.0	-5.1
400.22	14.2	20.8	35.0	37.0	-2.0
667.10	10.0	25.0	35.0	37.0	-2.0
934.00	6.6	27.8	34.4	37.0	-2.6

Radiated Emission (B)

Model: POC-153T **Test Mode:** Mode 1

Temperature: 24°C **Humidity:** 60% RH

Detector Function: Quasi-peak. **Antenna:** Horizontal at 10m

Tested by: Max Yan **Test Results:** Pass

(The chart below shows the highest readings taken from the final data)

Freq. (MHz)	Raw Data (dBuV)	Corr. Factor (dB/m)	Emiss. Level (dBuV/m)	Limits (dBuV/m)	Margin (dB)
135.10	12.6	14.2	26.8	30.0	-3.2
176.71	7.7	12.4	20.1	30.0	-9.9
181.82	8.9	12.2	21.1	30.0	-8.9
204.81	10.9	12.7	23.6	30.0	-6.4
227.31	9.6	13.2	22.8	30.0	-7.2
259.77	12.9	17.1	30.0	37.0	-7.0
400.23	14.2	20.8	35.0	37.0	-2.0
667.11	5.6	25.0	30.6	37.0	-6.4
933.85	5.9	27.8	33.7	37.0	-3.3

7 POWER HARMONICS TEST

Port : AC mains
Basic Standard : EN 61000-3-2 (2000)
Limits : ☐ CLASS A ; ☐ CLASS B; ☐ CLASS C ; ☒ CLASS D
Tested by : Max Yan
Temperature : 22°C
Humidity : 55% RH

Limit:

Limits for Class A equipment	
Harmonics Order n	Max. permissible harmonics current A
Odd harmonics	
3	2.30
5	1.14
7	0.77
9	0.40
11	0.33
13	0.21
15<=n<=39	0.15x15/n
Even harmonics	
2	1.08
4	0.43
6	0.30
8<=n<=40	0.23x8/n

Limits for Class D equipment		
Harmonics Order n	Max. permissible harmonics current per watt mA/W	Max. permissible harmonics current A
Odd Harmonics only		
3	3.4	2.30
5	1.9	1.14
7	1.0	0.77
9	0.5	0.40
11	0.35	0.33
13	0.30	0.21
15<=n<=39	3.85/n	0.15x15/n

Block Diagram of Test Setup:

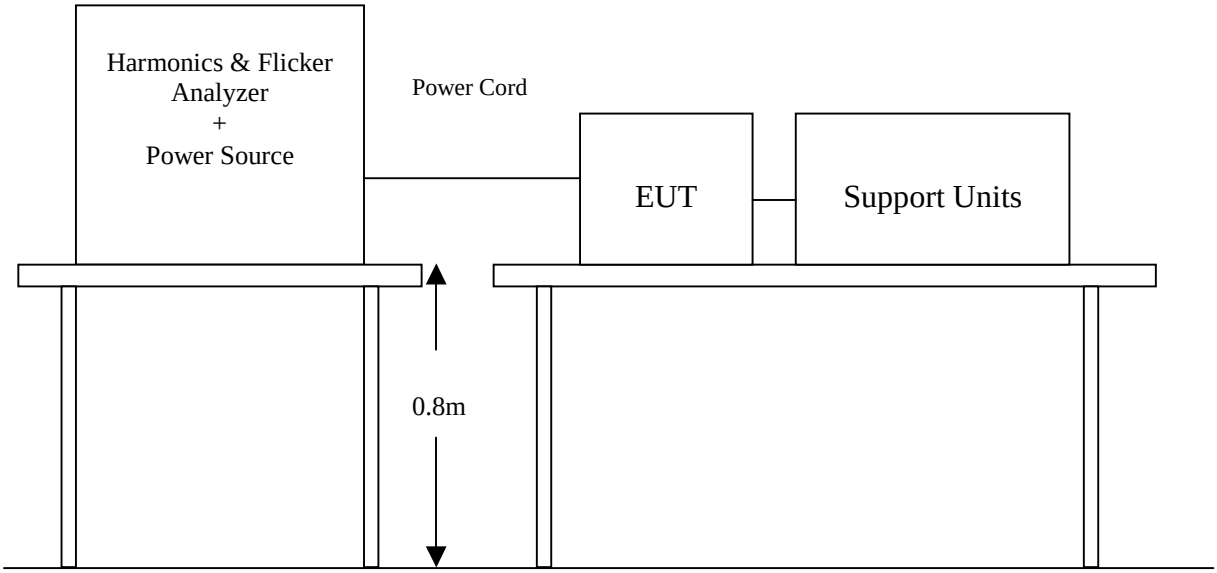

Test Procedure:

a. The EUT was placed on the top of a wooden table 0.8 meters above the ground and operated to produce the maximum harmonic components under normal operating conditions for each successive harmonic component in turn.

b. The correspondent test program of test instrument to measure the current harmonics emanated from EUT is chosen. The measure time shall be not less than the time necessary for the EUT to be exercised.

Test Result : (See Appendix II for details)

Note: *According to clause 7 of EN 61000-3-2: 2000, equipment with a rated power of 75W or less, no limits apply. The test result is only for reference.*

8 POWER VOLTAGE FLUCTUATION / FLICKER TEST

Port : AC mains
Basic Standard : EN 61000-3-3 (1995 + A1: 2001)
Limits : §5 of EN 61000-3-3
Tested by : Max Yan
Temperature : 22°C
Humidity : 55% RH

Limit:

TEST ITEM	LIMIT	REMARK
P_{st}	1.0	P_{st} means short-term flicker indicator.
P_{lt}	0.65	P_{lt} means long-term flicker indicator.
T_{dt} (ms)	500	T_{dt} means maximum time that dt exceeds 3 %.
d_{max} (%)	4%	d_{max} means maximum relative voltage change.
dc (%)	3.3%	dc means relative steady-state voltage change

Block Diagram of Test Setup:

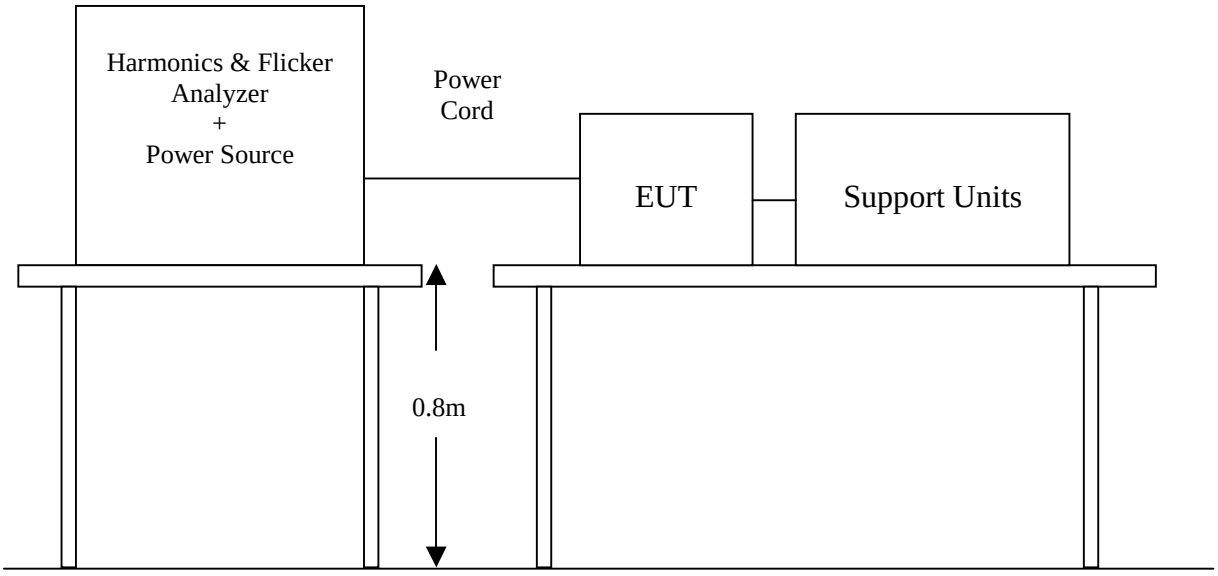

Test Procedure:

a. The EUT was placed on the top of a wooden table 0.8 meters above the ground and operated to produce the most unfavorable sequence of voltage changes under normal operating conditions.

b. During the flick measurement, the measure time shall include that part of whole operation cycle in which the EUT produce the most unfavorable sequence of voltage changes. The observation period for short-term flicker indicator is 10 minutes and the observation period for long-term flicker indicator is 2 hours.

Test Result: (See Appendix II for details)

** Continue

Test Parameter	Measurement Value	Limit	Result
P_{st}	0.072	1.0	Pass
P_{lt}	0.072	0.65	Pass
T_{dt} (ms)	0	500	Pass
d_{max} (%)	0%	4%	Pass
dc (%)	0.01%	3.3%	Pass

** Manual Switch

Test Parameter	Measurement Value	Limit	Result
P_{st}	0.076	1.0	Pass
P_{lt}	0.076	0.65	Pass
T_{dt} (ms)	0	500	Pass
d_{max} (%)	1.66%	4%	Pass
dc (%)	0.46%	3.3%	Pass

9 ELECTROSTATIC DISCHARGE (ESD) IMMUNITY TEST

Port	:	Enclosure
Basic Standard	:	IEC/EN 61000-4-2
Test Level	:	± 8 kV (Air Discharge)
		± 4 kV (Contact Discharge)
		± 4 kV (Indirect Discharge)
Performance Criterion	:	B (Standard Required)
Tested by	:	Max Yan
Temperature	:	22°C
Humidity	:	55% RH
Pressure	:	1019mbar

Block Diagram of Test Setup:

(The 470 k ohm resistors are installed per standard requirement.)

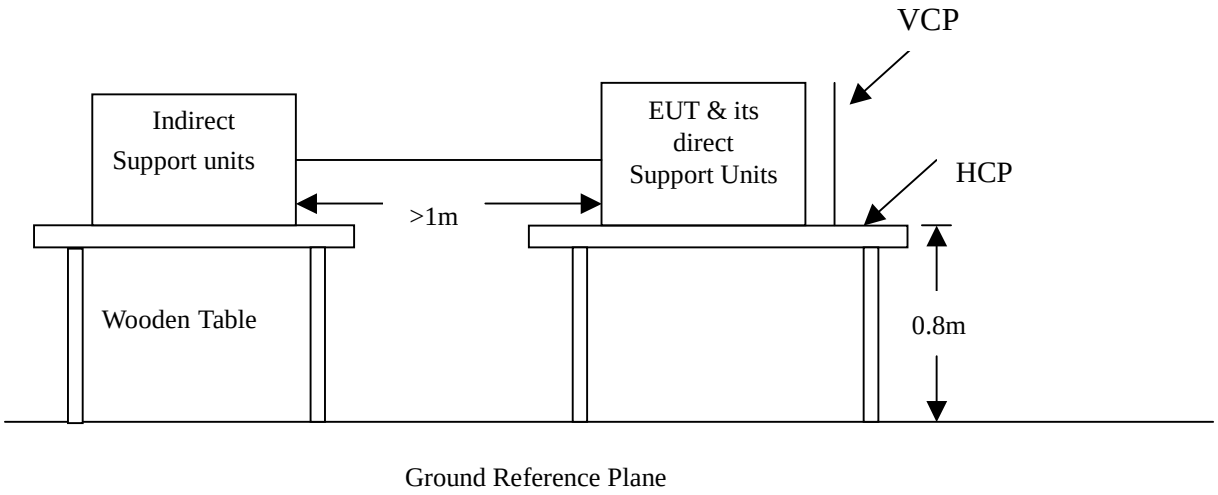

Test Procedure:

1. The EUT was located 0.1 m minimum from all side of the HCP.
2. The indirect support units were located 1 m minimum away from the EUT, but direct support unit was/were located at same location as EUT on the HCP and keep at a distance of 10 cm with EUT.
3. A scroll 'H' test program was loaded and executed in Windows 98 mode.
4. The EUT sent above message to LCD Panel of EUT and monitor related peripherals through the test.
5. Active the communication function if the EUT with such port(s).
6. As per the requirement of EN 55024; applying direct contact discharge at the sides other than front of EUT at minimum 50 discharges (25 positive and 25 negative) if applicable, can't be applied direct contact discharge side of EUT then the indirect discharge shall be applied. One of the test points shall be subjected to at least 50 indirect discharge (contact) to the front edge of horizontal coupling plane.
7. Other parts of EUT where it is not possible to perform contact discharge then selecting appropriate points of EUT for air discharge, a minimum of 10 single air discharges shall be applied.
8. The application of ESD to the contact of open connectors is not required.
9. The EUT direct connection units also need to be applied ESD at the port of EUT cable connected.
10. Putting a mark on EUT to show tested points. The following test condition was followed during the tests.

Note: As per IEC/EN 61000-4-2, two 470k bleed resistors cable is connected between the EUT and HCP during the test applicable for power ungrounded or battery operating unit only.

The electrostatic discharges were applied as follows:

Amount of discharge	Voltage	Coupling	Result (Pass/Fail)
Mini 10 /Point	± 8 kV	Air Discharge	Pass
Mini 25 /Point	± 4 kV	Contact Discharge	Pass
Mini 25 /Point	± 4 kV	Indirect Discharge HCP	Pass
Mini 25 /Point	± 4 kV	Indirect Discharge VCP (Right)	Pass
Mini 25 /Point	± 4 kV	Indirect Discharge VCP (Left)	Pass
Mini 25 /Point	± 4 kV	Indirect Discharge VCP (Back)	N/A

*****For the tested points to EUT, please refer to attached page.***
(Blue arrow mark for Contact Discharge and red arrow mark for Air Discharge)

Performance & Result:

☒ **Criteria A:** The apparatus continues to operate as intended. No degradation of performance or loss of function is allowed below a performance level specified by the manufacturer, when the apparatus is used as intended. In some cases the performance level may be replaced by a permissible loss of performance.

☐ **Criteria B:** The apparatus continues to operate as intended after the test. No degradation of performance or loss of function is allowed below a performance level specified by the manufacturer, when the apparatus is used as intended. In some cases the performance level may be replaced by a permissible loss of performance. During the test, degradation of performance is however allowed.

☐ **Criteria C:** Temporary loss of function is allowed, provided the functions self recoverable or can be restored by the operation of controls.

☒ **PASS**	☐ **FAIL**
Observation: No function degraded during the tests.	

The Tested Points of EUT

Photo 1 of 3

Photo 2 of 3

Photo 3 of 3

10 RADIATED ELECTROMAGNETIC FIELD IMMUNITY TEST

Port	:	Enclosure
Basic Standard	:	IEC/EN 61000-4-3
Requirements	:	3 V/m / with 80% AM. 1kHz Modulation.
Performance Criterion	:	A (Standard Required)
Tested by	:	Max Yan
Temperature	:	22°C
Humidity	:	55% RH
Pressure	:	1019mbar

Block Diagram of Test Setup:

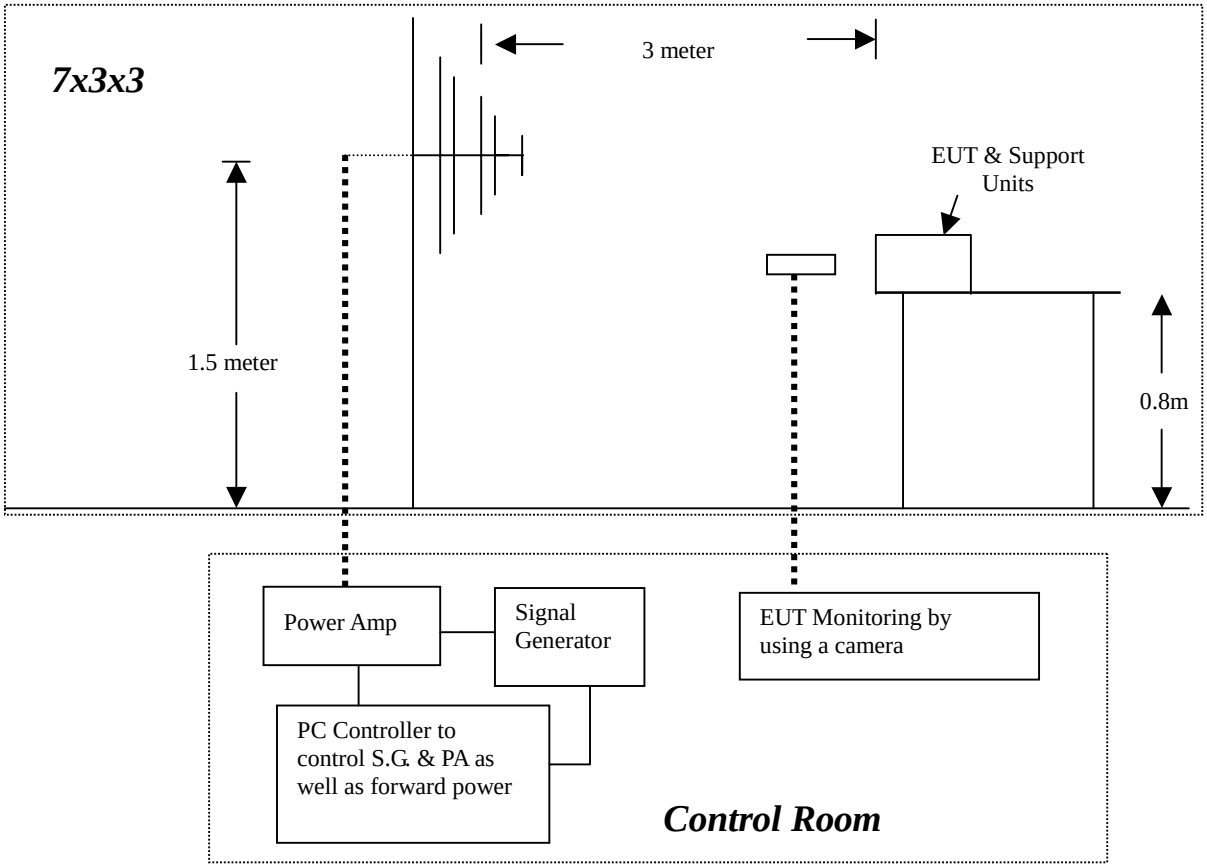

Test Procedure:

1. The EUT was located at the edge of supporting table keep 3 meter away from transmitting antenna, it just the calibrated square area of field uniformity. The support units were located outside of the uniformity area, but the cable(s) connected with EUT were exposed to the calibrated field as per IEC/EN 61000-4-3.
2. Setting the testing parameters of RS test software per IEC/EN 61000-4-3.
3. Performing the pre-test at each side of with double specified level (6V/m) at 4% steps.
4. From the result of pre-test in step 5, choice the worst side of EUT for final test from 80 MHz to 1000 MHz at 1% steps.
5. Recording the test result in following table.
6. It is not necessary to perform test as per annex A of EN 55024 if the EUT doesn't belong to ITE product.

Preliminary test conditions:

Test level : 6V/m
Steps : 4 % of fundamental
Dwell Time : 3 sec

Range (MHz)	Field	Modulation	Polarity	Position	Result (Pass/Fail)
80-1000	6V/m	Yes	H	Front	Pass
80-1000	6V/m	Yes	V	Front	Pass
80-1000	6V/m	Yes	H	Right	Pass
80-1000	6V/m	Yes	V	Right	Pass
80-1000	6V/m	Yes	H	Back	Pass
80-1000	6V/m	Yes	V	Back	Pass
80-1000	6V/m	Yes	H	Left	Pass
80-1000	6V/m	Yes	V	Left	Pass

Final test conditions:

Test level : 3V/m
Steps : 1 % of fundamental
Dwell Time : 3 sec

Range (MHz)	Field	Modulation	Polarity	Position	Result (Pass/Fail)
80-1000	3V/m	Yes	H	Front	Pass
80-1000	3V/m	Yes	V	Front	Pass

Performance & Result:

☒ **Criteria A:** The apparatus continues to operate as intended. No degradation of performance or loss of function is allowed below a performance level specified by the manufacturer, when the apparatus is used as intended. In some cases the performance level may be replaced by a permissible loss of performance.

☐ **Criteria B:** The apparatus continues to operate as intended after the test. No degradation of performance or loss of function is allowed below a performance level specified by the manufacturer, when the apparatus is used as intended. In some cases the performance level may be replaced by a permissible loss of performance. During the test, degradation of performance is however allowed.

☐ **Criteria C:** Temporary loss of function is allowed, provided the functions self recoverable or can be restored by the operation of controls.

☒ **PASS**	☐ **FAIL**
Observation: No function degraded during the tests.	

11 FAST TRANSIENTS/BURST IMMUNITY TEST

Port	:	On Power Supply Lines and LAN Cable
Basic Standard	:	IEC/EN 61000-4-4
Requirements	:	± 1 kV for Power Supply Line
		± 0.5kV for LAN Cables
Performance Criteria	:	B (Standard Required)
Tested by	:	Max Yan
Temperature	:	22°C
Humidity	:	55% RH
Pressure	:	1019mbar

Block Diagram of Test Setup:

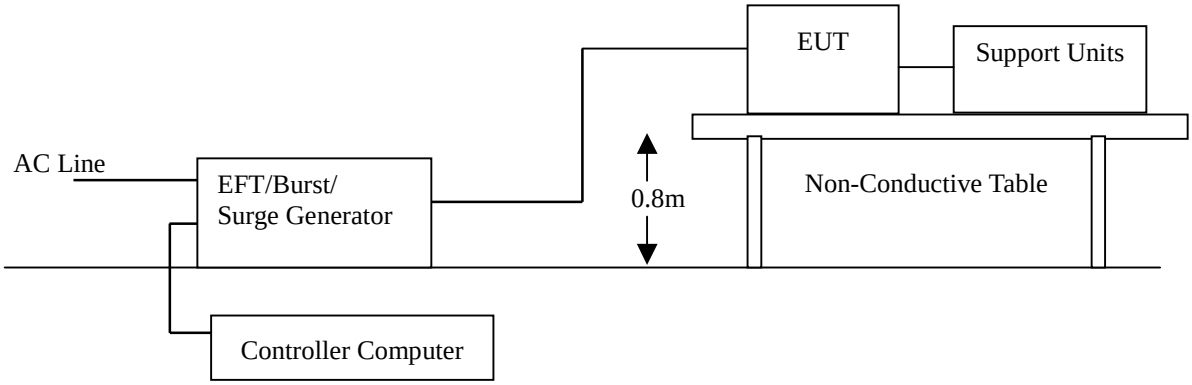

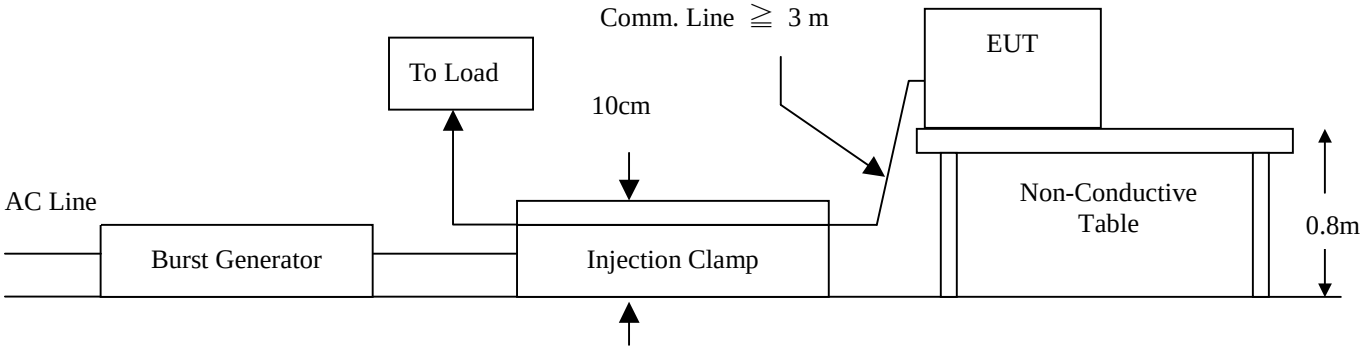

Test Procedure:

1. The EUT and support units were located on a wooden table 0.8 m away from ground reference plane.
2. A 1.0 meter long power cord was attached to EUT during the test.
3. The length of communication cable between communication port and clamp was keeping within 1 meter.
4. Injected test voltage to the EUT ports from minimum to standard request or client request.
5. Recording the test result as shown in following table.

Test conditions:

Impulse Frequency : 5kHz
Tr/Th : 5/50ns
Burst Duration : 15ms
Burst Period : 3Hz

Inject Line	Voltage kV	Inject Method	Result (Pass/Fail)
L	± 1	Direct	Pass
N	± 1	Direct	Pass
PE	± 1	Direct	Pass
L + N	± 1	Direct	Pass
L + PE	± 1	Direct	Pass
N + PE	± 1	Direct	Pass
L + N + PE	± 1	Direct	Pass
RJ 45 Port (LAN Cable)	± 0.5	Clamp	Pass

Performance & Result:

☒ **Criteria A:** The apparatus continues to operate as intended. No degradation of performance or loss of function is allowed below a performance level specified by the manufacturer, when the apparatus is used as intended. In some cases the performance level may be replaced by a permissible loss of performance.

☐ **Criteria B:** The apparatus continues to operate as intended after the test. No degradation of performance or loss of function is allowed below a performance level specified by the manufacturer, when the apparatus is used as intended. In some cases the performance level may be replaced by a permissible loss of performance. During the test, degradation of performance is however allowed.

☐ **Criteria C:** Temporary loss of function is allowed, provided the functions self recoverable or can be restored by the operation of controls.

☒ **PASS**	☐ **FAIL**
Observation: No function degraded during the tests.	

12 SURGE IMMUNITY TEST

Port	:	Power Cord
Basic Standard	:	IEC/EN 61000-4-5
Requirements	:	± 1 kV (Line to Line)
		± 2 kV (Line to Ground)
Performance Criteria	:	B (Standard Required)
Tested by	:	Max Yan
Temperature	:	22°C
Humidity	:	55% RH
Pressure	:	1019mbar

Block Diagram of Test Setup:

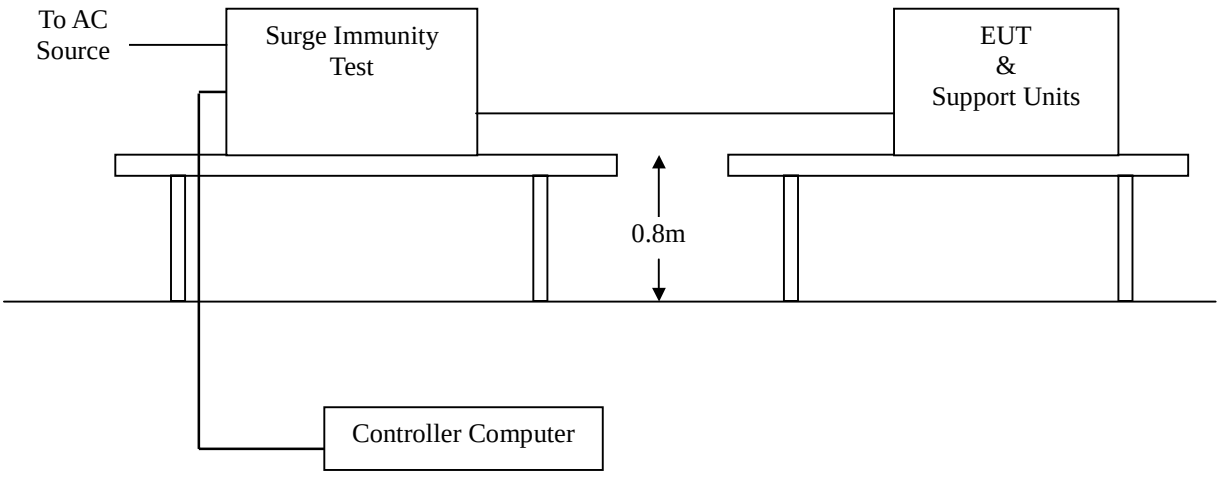

Test Procedure:

1. The EUT and support units were located on a wooden table 0.8 m away from ground floor.
2. Injected test voltage to the EUT ports from minimum to standard request or client request.
3. Recording the test result as shown in following table.

Test conditions:

Voltage Waveform : 1.2/50 *u*s
Current Waveform : 8/20 *u*s
Polarity : Positive/Negative
Phase angle : 0°, 90°, 270°
Number of Test : 5

Coupling Line	Voltage (kV)	Polarity	Coupling Method	Result (Pass/Fail)
L1-L2	1	Positive	Capacitive	Pass
L1-PE	2	Positive	Capacitive	Pass
L2-PE	2	Positive	Capacitive	Pass
L1-L2	1	Negative	Capacitive	Pass
L1-PE	2	Negative	Capacitive	Pass
L2-PE	2	Negative	Capacitive	Pass

Performance & Result:

☒ **Criteria A:** The apparatus continues to operate as intended. No degradation of performance or loss of function is allowed below a performance level specified by the manufacturer, when the apparatus is used as intended. In some cases the performance level may be replaced by a permissible loss of performance.

☐ **Criteria B:** The apparatus continues to operate as intended after the test. No degradation of performance or loss of function is allowed below a performance level specified by the manufacturer, when the apparatus is used as intended. In some cases the performance level may be replaced by a permissible loss of performance. During the test, degradation of performance is however allowed.

☐ **Criteria C:** Temporary loss of function is allowed, provided the functions self recoverable or can be restored by the operation of controls.

☒ **PASS** ☐ **FAIL**

Observation: No function degraded during the tests.

13 CONDUCTED DISTRBANCE/INDUCED RADIO-FREQUENCY FIELD IMMUNITY TEST

Port	:	AC Port and Signal/ LAN Cable
Basic Standard	:	IEC/EN 61000-4-6
Requirements	:	3 V with 80% AM. 1kHz Modulation.
Injection Method	:	CDN-M3 for Power Cord
		CDN-T4 for LAN Cable
Performance Criterion	:	A (Standard Required)
Tested by	:	Max Yan
Temperature	:	22°C
Humidity	:	55% RH
Pressure	:	1019mbar

Block Diagram of Test Setup:

Side View:

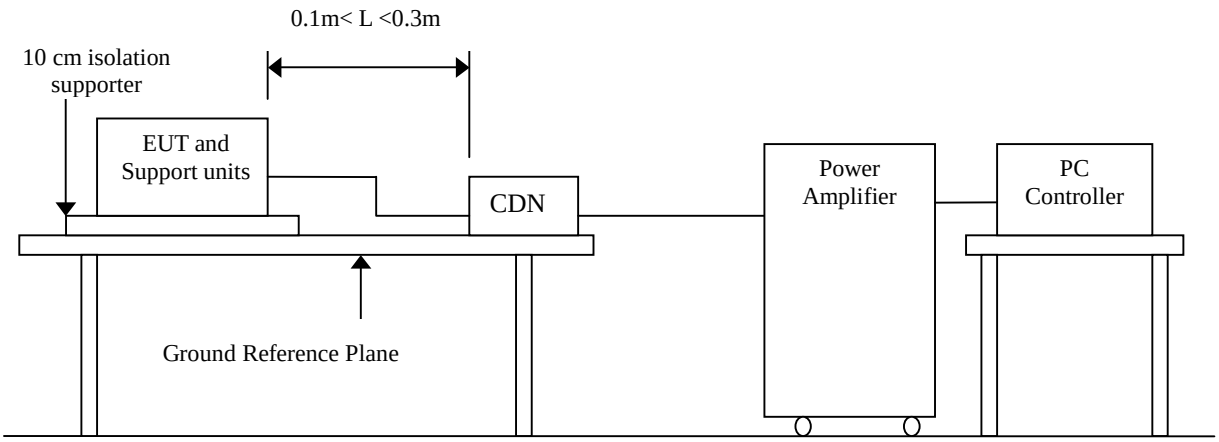

Top View:

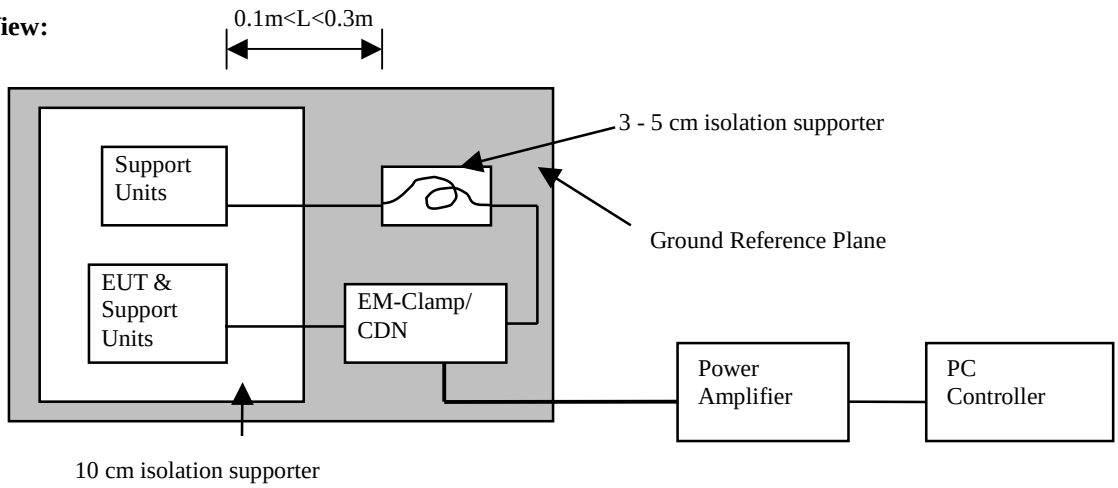

Test Procedure:

1. The EUT and support units were located at a ground reference plane with the interposition of a 0.1 m thickness insulating support and the CDN was located on GRP directly.
2. Setting the testing parameters of CS test software as per IEC/EN 61000-4-6.
3. Recording the test result in following table.

Test conditions:

Frequency Range : 0.15MHz-80MHz
Frequency Step : 1% of fundamental
Dwell Time : 3 sec

Range (MHz)	Field	Modulation	Result (Pass/Fail)
0.15-80	3V	Yes	Pass

Performance & Result:

☒ **Criteria A:** The apparatus continues to operate as intended. No degradation of performance or loss of function is allowed below a performance level specified by the manufacturer, when the apparatus is used as intended. In some cases the performance level may be replaced by a permissible loss of performance.

☐ **Criteria B:** The apparatus continues to operate as intended after the test. No degradation of performance or loss of function is allowed below a performance level specified by the manufacturer, when the apparatus is used as intended. In some cases the performance level may be replaced by a permissible loss of performance. During the test, degradation of performance is however allowed.

☐ **Criteria C:** Temporary loss of function is allowed, provided the functions self recoverable or can be restored by the operation of controls.

☒ **PASS** ☐ **FAIL**
Observation: No function degraded during the tests.

14 POWER FREQUENCY MAGNETIC FIELD IMMUNITY TEST

Port	:	Enclosure
Basic Standard	:	IEC/EN 61000-4-8
Requirements	:	1 A/m
Performance Criterion	:	A (Standard Required)
Tested by	:	Max Yan
Temperature	:	22°C
Humidity	:	55% RH
Pressure	:	1019mbar

Block Diagram of Test Setup:

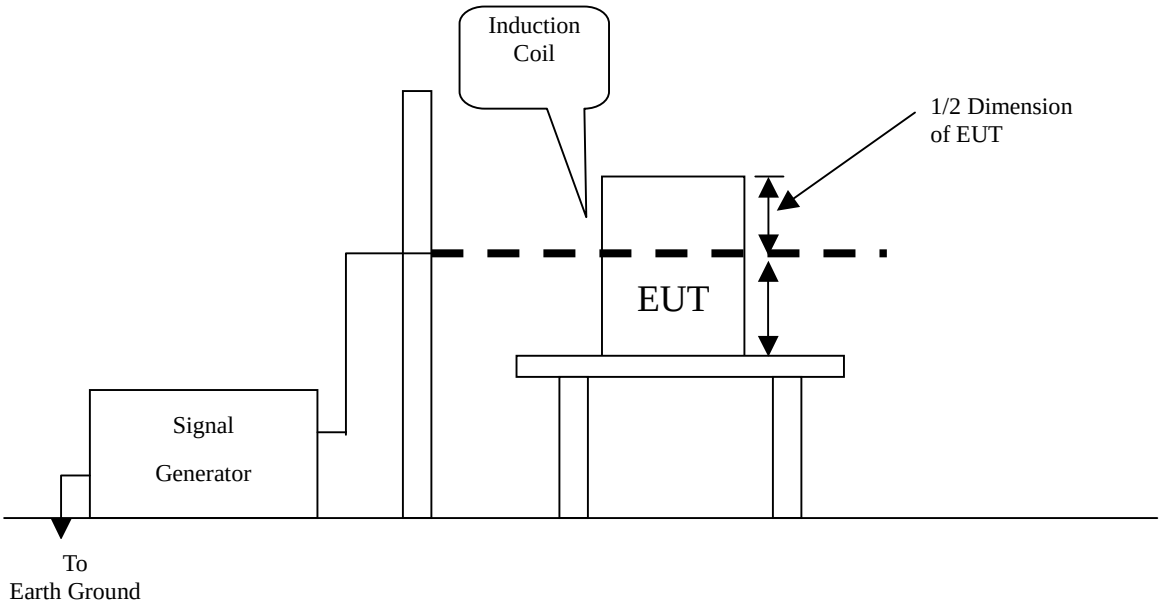

Test Procedure:

1. The EUT and support units were located on Ground Reference Plane with the interposition of a 0.1 m thickness insulation support.
2. Putting the induction coil on horizontal direction. (X direction)
3. Rotating the induction coil by 90° (Y direction)
4. Rotating the induction coil by 90° again (Z direction)
5. Recording the test result as shown in following table.

Test conditions:

Field Strength: 1A/m
Power Freq.: 50Hz
Orientation: X, Y, Z

Orientation	Field	Result (Pass/Fail)	Remark
X	1A/m	Pass	
Y	1A/m	Pass	
Z	1A/m	Pass	

Performance & Result:

☒ **Criteria A:** The apparatus continues to operate as intended. No degradation of performance or loss of function is allowed below a performance level specified by the manufacturer, when the apparatus is used as intended. In some cases the performance level may be replaced by a permissible loss of performance.

☐ **Criteria B:** The apparatus continues to operate as intended after the test. No degradation of performance or loss of function is allowed below a performance level specified by the manufacturer, when the apparatus is used as intended. In some cases the performance level may be replaced by a permissible loss of performance. During the test, degradation of performance is however allowed.

☐ **Criteria C:** Temporary loss of function is allowed, provided the functions self recoverable or can be restored by the operation of controls.

☒ **PASS** ☐ **FAIL**
Observation: No function degraded during the tests.

15 VOLTAGE DIPS / SHORT INTERRUPTIONS

Port : AC mains

Basic Standard : IEC/EN 61000-4-11

Requirement : PHASE ANGLE 0, 45, 90, 135, 180, 225, 270, 315 degrees

	Test Level % U_T	Reduction (%)	Duration (periods)	Performance Criteria
Voltage Dips	<5	>95	0.5	B
	70	30	25	C

	Test Level % U_T	Reduction (%)	Duration (periods)	Performance Criteria
Voltage Interceptions	<5	>95	250	C

Test Interval : Min. 10 sec.

Tested by : Max Yan

Temperature : 22 ^{o}C

Humidity : 55% RH

Pressure : 1019mbar

Block Diagram of Test Setup:

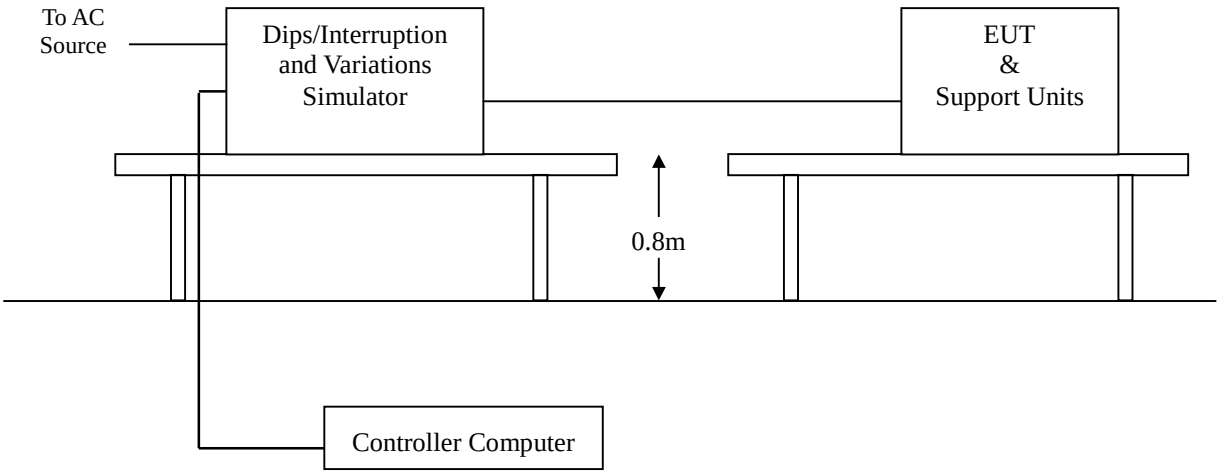

Test Procedure:

1. The EUT and support units were located on a wooden table, 0.8 m away from ground floor.
2. Setting the parameter of tests and then Perform the test software of test simulator.
3. Conditions changes to occur at 0 degree crossover point of the voltage waveform.
4. Recording the test result in test record form.

Test conditions

The duration with a sequence of three dips/interruptions with interval of 10 s minimum (Between each test event)

Voltage Dips:

Test Level % U_T	Reduction (%)	Duration (periods)	Observation	Meet Performance Criteria
0	100	0.5	Normal	A
70	30	25	Normal	A

Voltage Interruptions:

Test Level % U_T	Reduction (%)	Duration (periods)	Observation	Meet Performance Criteria
0	100	250	EUT shut down but can be recovered by manual, as the events disappear.	C

Normal: *No any functions degrade during and after the test.*

Performance & Result:

Criteria A: The apparatus continues to operate as intended. No degradation of performance or loss of function is allowed below a performance level specified by the manufacturer, when the apparatus is used as intended. In some cases the performance level may be replaced by a permissible loss of performance.

Criteria B: The apparatus continues to operate as intended after the test. No degradation of performance or loss of function is allowed below a performance level specified by the manufacturer, when the apparatus is used as intended. In some cases the performance level may be replaced by a permissible loss of performance. During the test, degradation of performance is however allowed.

Criteria C: Temporary loss of function is allowed, provided the functions self recoverable or can be restored by the operation of controls.

☒ **PASS** ☐ **FAIL**

APPENDIX I - PHOTOGRAPHS OF TEST SETUP

LINE CONDUCTED EMISSION TEST (EN 55022)

COMMON MODE CONDUCTED EMISSION TEST

RADIATED EMISSION TEST (EN 55022)

POWER HARMONIC & VOLTAGE FLUCTUATION / FLICKER TEST

ELECTROSTATIC DISCHARGE TEST

RADIATED ELECTROMAGNETIC FIELD TEST

FAST TRANSIENTS/BURST TEST

SURGE IMMUNITY TEST

CONDUCTED DISTURBANCE, INDUCED BY RADIO-FREQUENCY FIELDS TEST

POWER FREQUENCY MAGNETIC FIELD IMMUNITY TEST

VOLTAGE DIPS / INTERRUPTION TEST

APPENDIX II – TEST RESULT OF EN 61000-3-2/-3

Harmonic Emission - IEC 61000-3-2 , EN 61000-3-2 , (EN60555-2)

Comply: IEC 61000-3-2 Ed.2.1 :2001 (incl. Amd.14) - IEC 61000-4-7 Ed.1.0 :1991

ADVANTECH

HARCS Setup File : unnamed
HARCS Report File : unnamed

Operator :	MAX YAN
EUT :	PANEL PC
Model No.	POC-153T
Remarks	1024*768 TEMP:22 HUMD:55

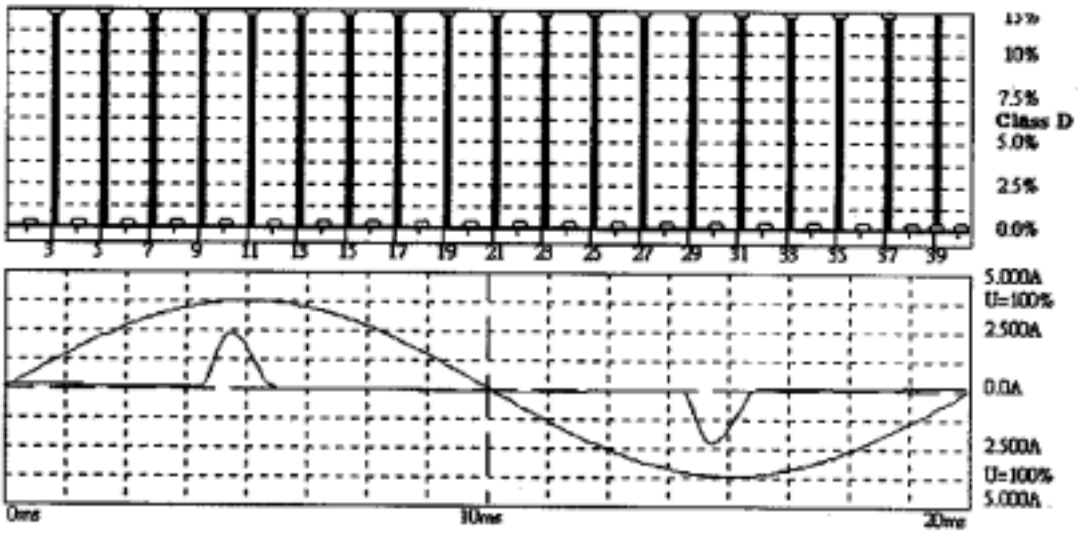

Harmonic Emission - IEC 61000-3-2 , EN 61000-3-2 , (EN60555-2) 2004/1/2 PM 03:07:11

Urms =	230.1	V	P =	62.21	W	THC =	0.533	A	Range:	5 A
Irms =	0.591	A	pf =	0.458		Pmax =	65.69	W	V-nom:	230 V
									TestTime:	5 min.(100%)

PANEL PC **Test completed, Result: FAILED**
*1024*768 TEMP:22 HUMD:55*

Full Bar : Actual Values
Empty Bar : Maximum Values
Blue : Current , Green : Voltage , Red : Failed

Measurement

ADVANTECH Date : 2004/1/2 PM 03:07:11 V3.15

File :

Operator :	MAX YAN
EUT :	PANEL PC
Model No.	POC-153T
Remarks	1024*768 TEMP:22 HUMD:55

```
Urms =  230.1V  Freq =  49.987  Range:  5 A
Irms =  0.591A  Ipk  =  2.356A  cf    =  3.988
P    =  62.21W  Pap  =  136.0VA pf    =  0.458
THDi =  88.3 %  THDu =  0.10 %  Class D

Test - Time :   5min    ( 100 %)

Limit Reference:        Pmax = 65.687W

Test completed, Result: FAILED
```

Order	Freq. [Hz]	Imax [A]	Imax% [%]	Imax%L [%]	Limit [A]	Status
1	50	0.2994	50.671			
2	100	0.0009	0.1550			
3	150	0.2759	46.694	123.53	0.2233	Fail
4	200	0.0012	0.2066			
5	250	0.2594	43.905	207.84	0.1248	Fail
6	300	0.0015	0.2583			
7	350	0.2350	39.773	357.73	0.0657	Fail
8	400	0.0018	0.3099			
9	450	0.2048	34.659	623.48	0.0328	Fail
10	500	0.0021	0.3616			
11	550	0.1709	28.926	743.34	0.0230	Fail
12	600	0.0024	0.4132			
13	650	0.1355	22.934	696.52	0.0195	Fail
14	700	0.0024	0.4132			
15	750	0.1019	17.252	604.57	0.0169	Fail
16	800	0.0024	0.4132			
17	850	0.0717	12.138	482.08	0.0149	Fail
18	900	0.0021	0.3616			
19	950	0.0464	7.8512	348.50	0.0133	Fail
20	1000	0.0021	0.3616			
21	1050	0.0272	4.5971	225.54	0.0120	Fail
22	1100	0.0018	0.3099			
23	1150	0.0189	3.2025	172.08	0.0110	Fail
24	1200	0.0015	0.2583			
25	1250	0.0217	3.6674	214.19	0.0101	Fail
26	1300	0.0015	0.2583			
27	1350	0.0244	4.1322	260.65	0.0094	Fail
28	1400	0.0015	0.2583			
29	1450	0.0244	4.1322	279.96	0.0087	Fail
30	1500	0.0015	0.2583			
31	1550	0.0217	3.6674	265.60	0.0082	Fail
32	1600	0.0015	0.2583			
33	1650	0.0177	2.9959	230.97	0.0077	Fail
34	1700	0.0015	0.2583			
35	1750	0.0128	2.1694	177.39	0.0072	Fail
36	1800	0.0015	0.2583			
37	1850	0.0079	1.3430	116.09	0.0068	Fail
38	1900	0.0012	0.2066			
39	1950	0.0046	0.7748	70.593	0.0065	
40	2000	0.0012	0.2066			

Important:
Pmax is below 75W. This seems not to be a class D equipment.

Calculation of Individual Harmonic Limits

For **Class D** the Limits are related to Pmax which is the Maximum Active Power consumption ot the EUT during the test time.

Flicker Emission - IEC 61000-3-3 , EN 61000-3-3 , (EN60555-3)

Comply: IEC 61000-3-3 Ed.1.1 :2002 (incl. Amd.1) - IEC 61000-4-15 Ed.1.0 :1997 (

ADVANTECH

HARCS Setup File : unnamed
HARCS Report File : unnamed

Operator :	MAX YAN
EUT :	PANEL PC
Model No.	POC-153T
Remarks	1024*768 TEMP:22 HUMD:55(CONTINUE)

Flickermeter 1000-4-15 for 230V/50Hz

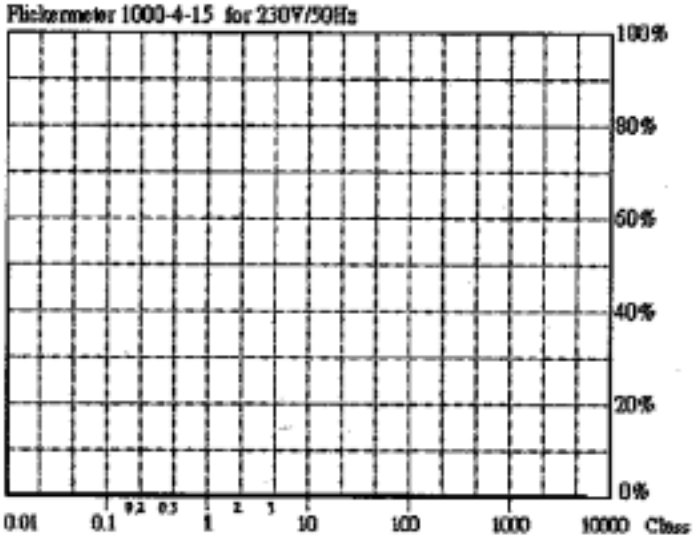

Actual Flicker (Fli):	**0.00**
Short-term Flicker (Pst):	**0.07**
Limit (Pst):	1.00
Long-term Flicker (Plt):	**0.07**
Limit (Plt):	0.65
Maximum Relative Volt. Change (dmax):	**0.00%**
Limit (dmax):	4.00%
Relative Steady-state Voltage Change (dc):	**0.01%**
Limit (dc):	3.30%
Maximum Interval exceeding 3.30% (dt):	**0.00ms**
Limit (dt>Lim):	500ms

Flicker Emission - IEC 61000-3-3 , EN 61000-3-3 , (EN60555-3) 2004/1/2 PM 03:22:19

Urms =	230.1	V	P =	62.34	W
Irms =	0.599	A	pf =	0.457	

Range:	5 A
V-nom:	230 V
TestTime:	10 min (100%)

PANEL PC **Test completed, Result: PASSED**

*1024*768 TEMP:22 HUMD:55(CONTINUE)*

Full Bar : Actual Values
Empty Bar : Maximum Values
Circles : Average Values
Blue : Current , Green : Voltage , Red : Failed

Measurement

ADVANTECH Date : 2004/1/2 PM 03:22:19 V3.15

File :

Operator :	MAX YAN
EUT :	PANEL PC
Model No.	POC-153T

```
Remarks                                  1024*768 TEMP:22 HUMD:55(CONTINUE)

Urms =  230.1V  Freq =  49.987  Range:  5 A
Irms =  0.593A  Ipk  =  2.390A  cf    =  4.029
P    =  62.34W  Pap  =  136.5VA pf    =  0.457

Test - Time :   1 x 10min = 10min        ( 100 %)

LIN (Line Impedance Network) :  SLIN 0.24ohm +j0.15ohm N:0.16ohm +j0.10ohm

Limits :        Plt  :  0.65    Pst    : 1.00
                dmax :  4.00 %  dc     : 3.30 %
                dtLim:  3.30 %  dt>Lim: 500ms

Test completed, Result: PASSED

Plt  =  0.072

        Pst     dmax    dc      dt>Lim  Fail
                [%]     [%]     [ms]
1       0.072   0.000   0.010   0.000
```

Definitions of Abbreviations

```
Urms      ***    Actual total Voltage in Volt RMS
Irms      ***    Actual total Current in Ampere RMS
Ipk       ***    Actual Peak value of the Current in Ampere
cf        ***    Actual Crest Factor (Ipk/Irms)
P         ***    Actual Active Power in Watt
Pap       ***    Actual Apparent Power in VA (Urms*Irms)
pf        ***    Actual Power Factor (P/Pap)

Plt              Long term Flicker over all Pst cycles

For every Pst-cycle:

Pst              Short term Flicker
dmax             Maximum voltage changes between two steady state conditions
dc               Voltage changes between two steady conditions
dt>Lim           Time during the voltage variation go to across
                 the defined limit (dtlim)

General :
- The values marked with "***" are actual values which could vary
  during test-time and are taken at the time of protocol printout.
```

Flicker Emission - IEC 61000-3-3 , EN 61000-3-3 , (EN60555-3)

Comply: IEC 61000-3-3 Ed.1.1 :2002 (incl. Amd.1) - IEC 61000-4-15 Ed.1.0 :1997 (

ADVANTECH

HARCS Setup File : unnamed
HARCS Report File : unnamed

Operator :	MAX YAN
EUT :	PANEL PC
Model No.	POC-153T
Remarks	1024*768 TEMP:22 HUMD:55

Flickermeter 1000-4-15 for 230V/50Hz

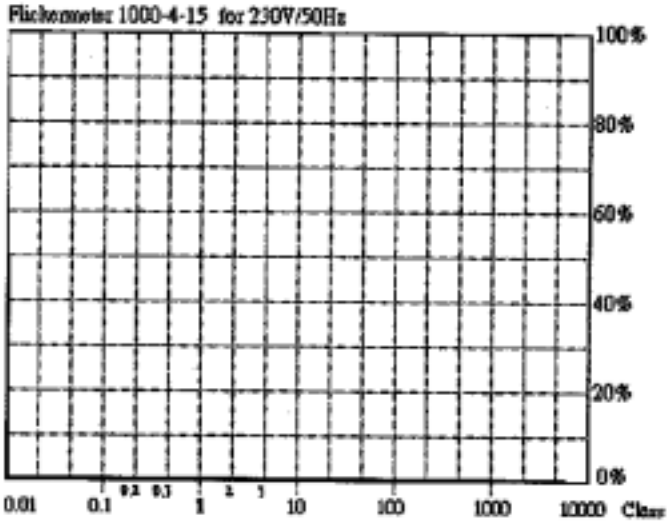

Actual Flicker (Pli):	**0.00**
Short-term Flicker (Pst):	**0.08**
Limit (Pst):	1.00
Long-term Flicker (Plt):	**0.08**
Limit (Plt):	0.65
Maximum Relative Volt. Change (dmax):	**1.66%**
Limit (dmax):	4.00%
Relative Steady-state Voltage Change (dc):	**0.46%**
Limit (dc):	3.30%
Maximum Interval exceeding 3.30% (dt):	**0.00ms**
Limit (dt>Lim):	500ms

Flicker Emission - IEC 61000-3-3 , EN 61000-3-3 , (EN60555-3) 2004/1/2 PM 03:35:13

Urms =	230.1	V	P =	58.78	W	Range:	5 A
Irms =	0.564	A	pf =	0.453		V-nom:	230 V
						TestTime:	10 min (100%)

PANEL PC **Test completed, Result: PASSED**
*1024*768 TEMP:22 HUMD:55*

Full Bar : Actual Values
Empty Bar : Maximum Values
Circles : Average Values
Blue : Current , Green : Voltage , Red : Failed

Measurement

ADVANTECH Date : 2004/1/2 PM 03:35:13 V3.15

File :

Operator :	MAX YAN
EUT :	PANEL PC
Model No.	POC-153T

```
Remarks                          1024*768 TEMP:22 HUMD:55

Urms =  230.1V  Freq =  49.974  Range:  5 A
Irms =  0.564A  Ipk  =  2.288A  cf    =  4.056
P    =  58.78W  Pap  =  129.8VA pf    =  0.453

Test - Time :   1 x 10min = 10min       ( 100 %)

LIN (Line Impedance Network) :  SLIN 0.24ohm +j0.15ohm N:0.16ohm +j0.10ohm

Limits :        Plt  :  0.65    Pst    : 1.00
                dmax :  4.00 %  dc     : 3.30 %
                dtLim:  3.30 %  dt>Lim: 500ms

Test completed, Result: PASSED

Plt  =  0.076

        Pst     dmax    dc      dt>Lim  Fail
                [%]     [%]     [ms]
1       0.076   1.660   0.460   0.000
```

Definitions of Abbreviations

```
Urms     ***    Actual total Voltage in Volt RMS
Irms     ***    Actual total Current in Ampere RMS
Ipk      ***    Actual Peak value of the Current in Ampere
cf       ***    Actual Crest Factor (Ipk/Irms)
P        ***    Actual Active Power in Watt
Pap      ***    Actual Apparent Power in VA (Urms*Irms)
pf       ***    Actual Power Factor (P/Pap)

Plt             Long term Flicker over all Pst cycles

For every Pst-cycle:

Pst             Short term Flicker
dmax            Maximum voltage changes between two steady state conditions
dc              Voltage changes between two steady conditions
dt>Lim          Time during the voltage variation go to across
                the defined limit (dtlim)

General :
- The values marked with "***" are actual values which could vary
  during test-time and are taken at the time of protocol printout.
```