SPC-101

10.4” TFT LCD Smart Panel

Computer with Intel® Xscale CPU®

& Windows CE.5.0®

Users Manual

Copyright

Acknowledgements

IBM, PC/AT, PS/2 and VGA are trademarks of International Business Machines Corporation.

Intel® is trademark of Intel Corporation.

Microsoft® Windows® CE 5.0 is a registered trademark of Microsoft Corp.

All other product names or trademarks are properties of their respective owners.

For more information on this and other Advantech products, please visit our websites at:

http://www.advantech.com

For technical support and service, please visit our support website at:

http://eservice.advantech.com.tw/eservice/

This manual is for the SPC-101 series products.

1st. Edition: September 2006

FCC Class A

This equipment has been tested and found to comply with the limits for a Class A digital device, pursuant to Part 15 of the FCC Rules. These limits are designed to provide reasonable protection against harmful interference when the equipment is operated in a residential environment. This equipment generates, uses, and can radiate radio frequency energy. If not installed and used in accordance with this user's manual, it may cause harmful interference to radio communications. Note that even when this equipment is installed and used in accordance with this user's manual, there is still no guarantee that interference will not occur. If this equipment is believed to be causing harmful interference to radio or television reception, this can be determined by turning the equipment on and off. If interference is occurring, the user is encouraged to try to correct the interference by one or more of the following measures:

• Reorient or relocate the receiving antenna

• Increase the separation between the equipment and the receiver

• Connect the equipment to a power outlet on a circuit different from that to which the receiver is connected

• Consult the dealer or an experienced radio/TV technician for help

Warning! HIGH VOLTAGE!!!

Please do NOT touch the inverter between main board and LCD panelwith your hands or any other electric conductors.

Warning! *Any changes or modifications made to the equipment which are not expressly approved by the relevant standards authority could void your authority to operate the equipment.*

Packing List

Before you begin to use SPC, please make sure that the following materials have been shipped.

SPC-101 Smart Panel Computer

Windows® CE.NET end user license agreement (for Windows® CE. version)

Advantech Software Support CD (Windows® CE.5.0)

• Readme.txt

• Datasheet

• User manual

• Windows® CE.NET 5.0 platforms SDK (for Windows® CE.)

3-pin power connector

Warranty card

If any of these items are missing or damaged, contact your distributor or sales representative immediately.

Additional Information and Assistance

Step 1: Visit the Advantech web site at **www.advantech.com/risc** where you can find the latest information about the product.

Step 2: Contact your distributor, sales representative, or Advantech's customer service center for technical support if you need additional assistance. Please have the following information ready before you call:

• Product name and serial number

• Description of your peripheral attachments

• Description of your software (operating system, version, application software, etc.)

• A complete description of the problems

• The exact wording of any error messages

Safety Instructions

1. Read these safety instructions carefully.

2. Keep this User's Manual for later reference.

3. Disconnect this equipment from any AC outlet before cleaning. Use a damp cloth.

   Do not use liquid or spray detergents for cleaning.

4. For plug-in equipment, the power outlet socket must be located near the equipment and must be easily accessible.

5. Keep this equipment away from humidity.

6. Put this equipment on a reliable surface during installation. Dropping it or letting it fall may cause damage.

7. The openings on the enclosure are for air convection. Protect the equipment from overheating. DO NOT COVER THE OPENINGS.

8. Make sure the voltage of the power source is correct before connecting the equipment to the power outlet.

9. Position the power cord so that people cannot step on it. Do not place anything over the power cord.

10. All cautions and warnings on the equipment should be noted.

11. If the equipment is not used for a long time, disconnect it from the power source to avoid damage by transient over voltage.

12. Never pour any liquid into an opening. This may cause fire or electrical shock.

13. Never open the equipment. For safety reasons, the equipment should be opened only by qualified service personnel.

14. If one of the following situations arises, get the equipment checked by service personnel:

a. The power cord or plug is damaged.

b. Liquid has penetrated into the equipment.

c. The equipment has been exposed to moisture.

d. The equipment does not work well, or you cannot get it to work according to the user's manual.

e. The equipment has been dropped and damaged.

f. The equipment has obvious signs of breakage.

15. DO NOT LEAVE THIS EQUIPMENT IN AN ENVIRONMENT WHERE THE STORAGE TEMPERATURE MAY GO BELOW -20° C (-4° F) OR ABOVE 60° C (140° F). THIS COULD DAMAGE THE EQUIPMENT. THE EQUIPMENT SHOULD BE IN A CONTROLLED ENVIRONMENT.

The sound pressure level at the operator's position according to IEC 704-1:1982 is no more than 70dB (A).

DISCLAIMER: This set of instructions is given according to IEC 704-1. Advantech disclaims all responsibility for the accuracy of any statements contained herein.

Wichtige Sicherheishinweise

1. Bitte lesen sie Sich diese Hinweise sorgfältig durch.
2. Heben Sie diese Anleitung für den späteren Gebrauch auf.
3. Vor jedem Reinigen ist das Gerät vom Stromnetz zu trennen. Verwenden Sie Keine Flüssig-oder Aerosolreiniger. Am besten dient ein angefeuchtetes Tuch zur Reinigung.
4. Die NetzanschluBsteckdose soll nahe dem Gerät angebracht und leicht zugänglich sein.
5. Das Gerät ist vor Feuchtigkeit zu schützen.
6. Bei der Aufstellung des Gerätes ist auf sicheren Stand zu achten. Ein Kippen oder Fallen könnte Verletzungen hervorrufen.
7. Die Belüftungsöffnungen dienen zur Luftzirkulation die das Gerät vor überhitzung schützt. Sorgen Sie dafür, daB diese Öffnungen nicht abgedeckt werden.
8. Beachten Sie beim. AnschluB an das Stromnetz die AnschluBwerte.
9. Verlegen Sie die NetzanschluBleitung so, daB niemand darüber fallen kann. Es sollte auch nichts auf der Leitung abgestellt werden.
10. Alle Hinweise und Warnungen die sich am Geräten befinden sind zu beachten.
11. Wird das Gerät über einen längeren Zeitraum nicht benutzt, sollten Sie es vom Stromnetz trennen. Somit wird im Falle einer Überspannung eine Beschädigung vermieden.
12. Durch die Lüftungsöffnungen dürfen niemals Gegenstände oder Flüssigkeiten in das Gerät gelangen. Dies könnte einen Brand bzw. elektrischen Schlag auslösen.
13. Öffnen Sie niemals das Gerät. Das Gerät darf aus Gründen der elektrischen Sicherheit nur von authorisiertem Servicepersonal geöffnet werden.
14.Wenn folgende Situationen auftreten ist das Gerät vom Stromnetz zu trennen und von einer qualifizierten Servicestelle zu überprüfen:
   a - Netzkabel oder Netzstecker sind beschädigt.
   b - Flüssigkeit ist in das Gerät eingedrungen.
   c - Das Gerät war Feuchtigkeit ausgesetzt.
   d - Wenn das Gerät nicht der Bedienungsanleitung entsprechend funktioniert oder Sie mit Hilfe dieser Anleitung keine Verbesserung erzielen.
   e - Das Gerät ist gefallen und/oder das Gehäuse ist beschädigt.
   f - Wenn das Gerät deutliche Anzeichen eines Defektes aufweist.

Der arbeitsplatzbezogene Schalldruckpegel nach DIN 45 635 Teil 1000 beträgt 70 dB(A) oder weiger.

DISCLAIMER: This set of instructions is given according to IEC704-1.

Advantech disclaims all responsibility for the accuracy of any statements contained herein.

CHAPTER

1

General Information

This chapter gives background Information of the SPC-101

Sections include:

- Introduction
- Mounting
- Dimension and cutout

1.1 Introduction

The SPC-101A integrates the Intel XScale PXA270 CPU and Windows CE 5.0. It is designed to provide customers with an embedded display platform with high computing power and good graphic performance. The SPC-101A integrates the Intel 2700G graphics chip that supports MPEG-4 @ 30 frames per second to provide good graphic capabilities for interactive media applications. SPC series supports Adobe Flash Player and Java Virtual Machine (JVM) by project base. Colorful GUIs are easy to develop using Adobe Flash and Java.

Removable back cover: The back cover of the SPC series is easily removed to fit customer application needs. With the flexibility of a removable back cover, customers can better utilize the location and type of I/O by designing their own back for seamless integration.

Dust and spill resistant: IP65 rated front bezel for protection from dust and water damage.

Fan-less and ultra low power consumption

Compact size

SM bus for battery power: SPC keep the SM bus interface inside, users can equip battery through SM bus to provide mobility on their own solution. The SM bus is made through I^2C

Versatile I/O: RS-232, RS-485, USB host, LAN, PCMCIA slot, CF slot, audio jack, DIO, etc.

Applications

- Factory automation in manufacturing and warehousing
- Kiosks in public places – airports, information centers, railway stations and shopping malls
- HMI: Human Machine Interface
- Entertainment – Gaming, Casino
- Hotel, Restaurant, and Hospitality
- Medical and health care in Hospital
- Portable/Mobile device
- In-vehicle device

1.2 Mounting

SPC-101C

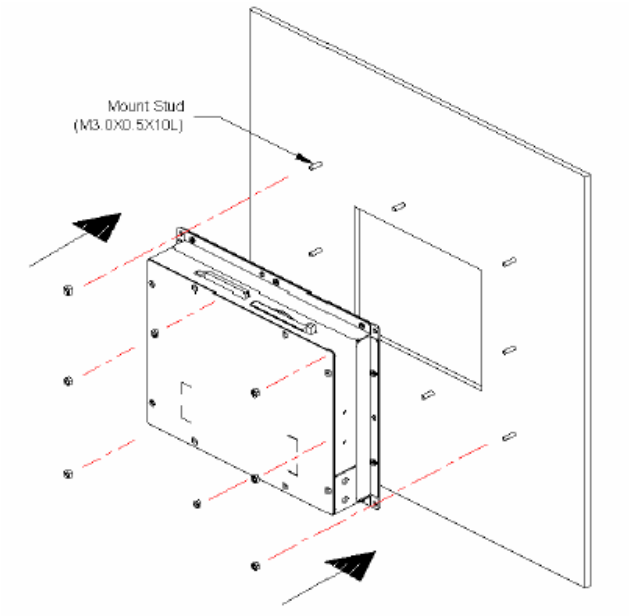

Rear View for Panel Mount (SPC-101C)
Unit: mm

SPC-101A

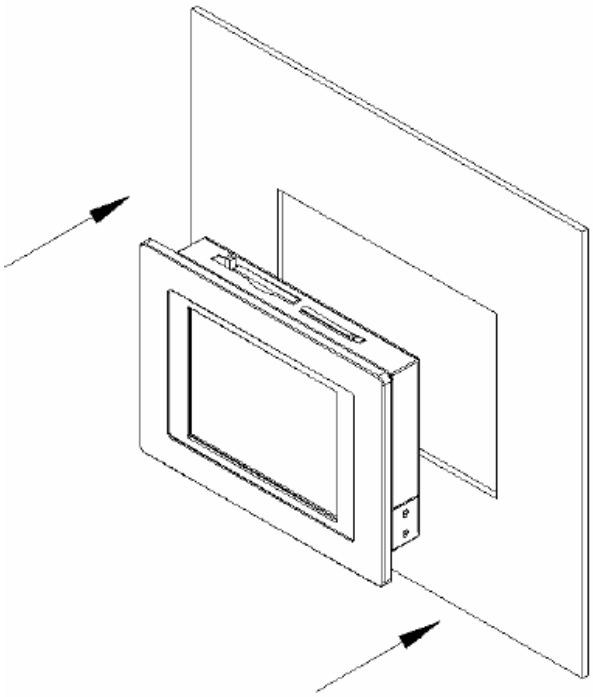

Front View (SPC-101C)

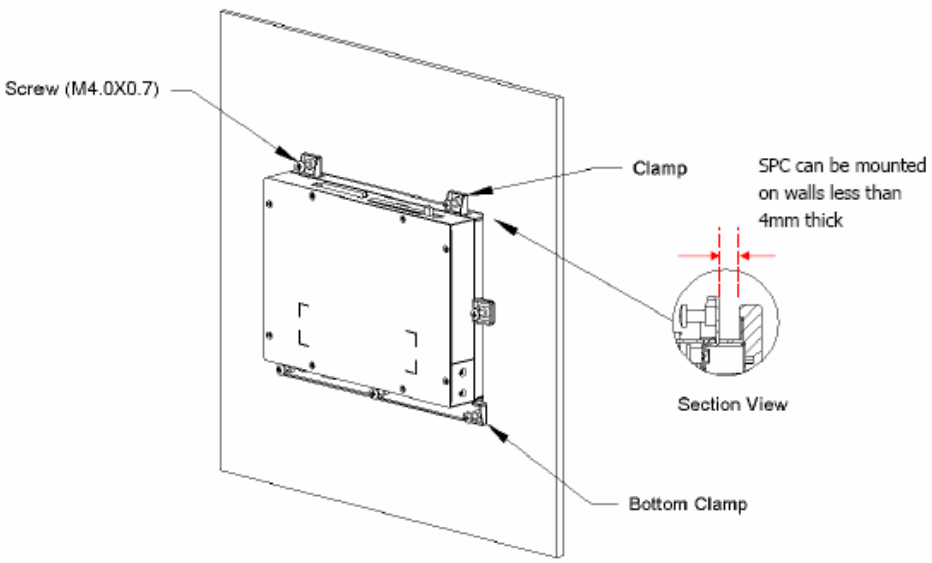

Rear View (SPC-101A)

1.3 Dimension and cutout

SPC-101A

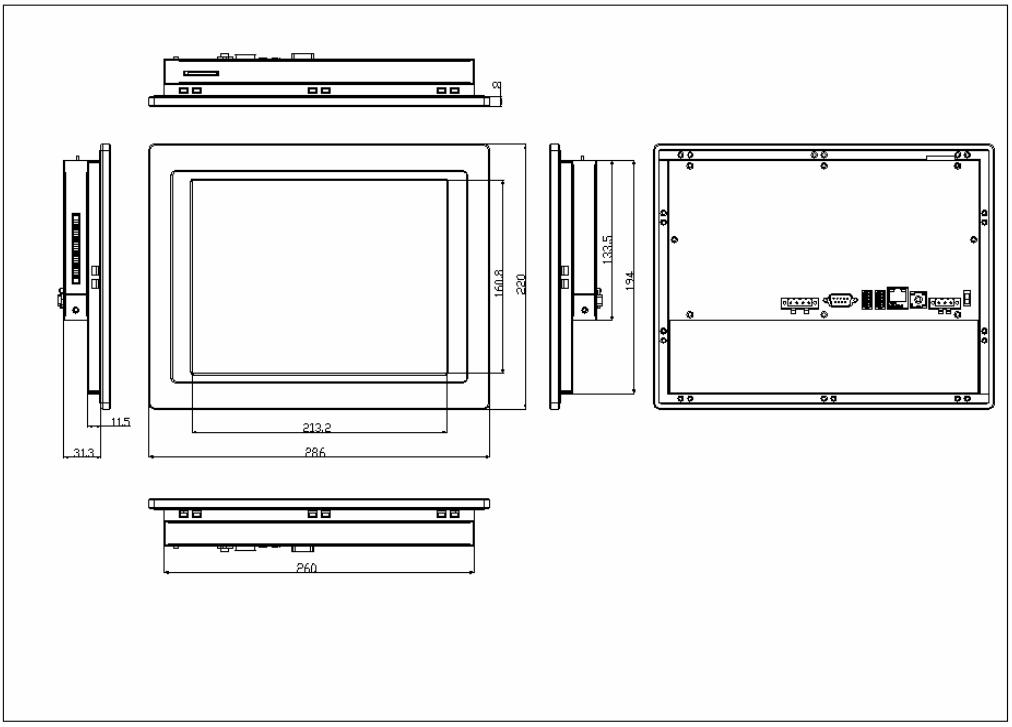

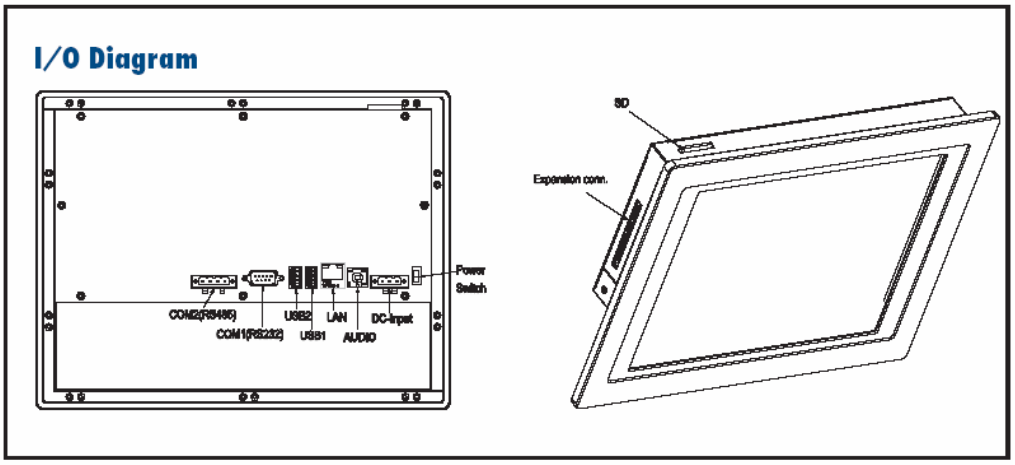

SPC-101C

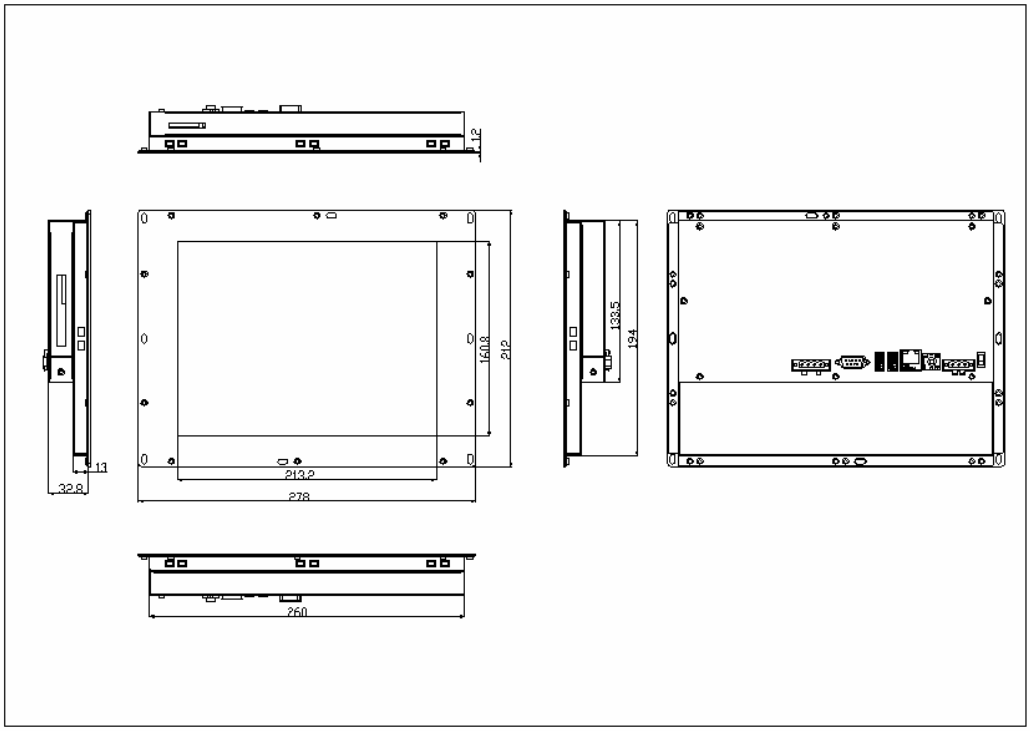
12
13
32.8
213.2
278
160.8
212
133.5
124
260

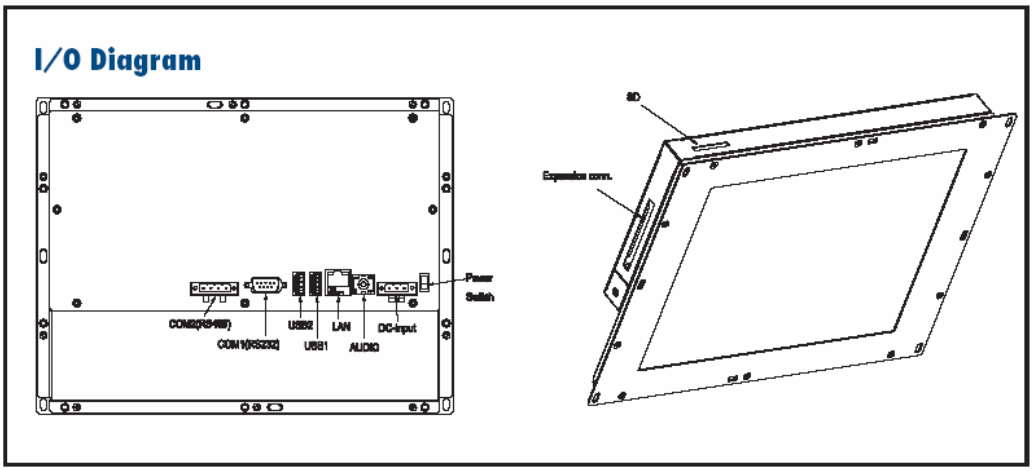
I/O Diagram
SD
Expansion conn.
Power
Switch
COM2(RS485)
COM1(RS232)
USB2
USB1
LAN
AUDIO
DC-input

CHAPTER

2

Getting Start

This chapter provides brief Instructions for operating the SPC-101

2.1 Quick Starting

Step1: Unpack the SPC-101 from its packing. Please check the packing list at the beginning of this manual.

Step2: Connect the power connector to 10 ~ 24 Vdc power source. The power source can either be from a power adapter or an in-house power source.

Step3: Connect the power source to the system power supply.

Step4: Plug in the power lines and turn on the system power switch, you will see the Welcome screen of Windows® CE.NET. Then you can start to use SPC-58.

Step5: Turn on the power switch.

Step6: Calibrate the touch screen.

2.2 Supplying Power to SPC

1. SPC accepts only DC power, not AC power
2. The DC input range for SPC is 10V ~ 28V.
3. Install the Vcc cable and GND cable into the male power connector (male power connector is in the package of SPC)
4. Plug the male power connector into female power connector in SPC.

5. Turn on the power switch

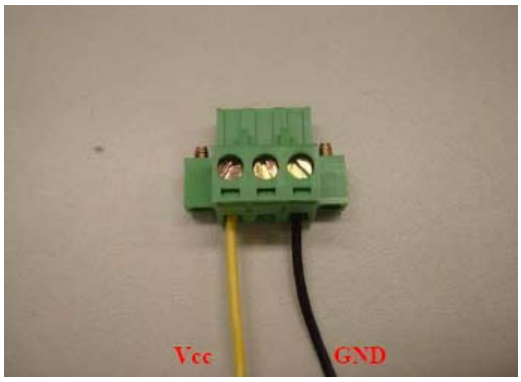

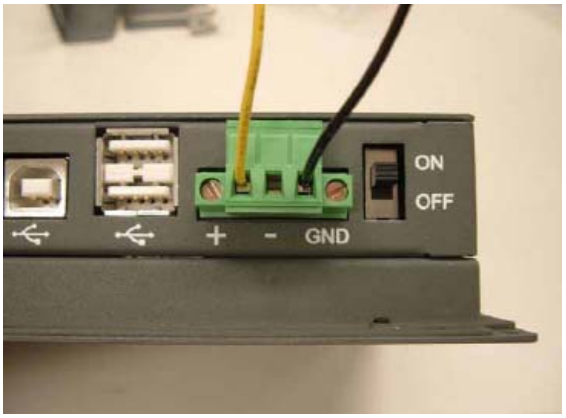

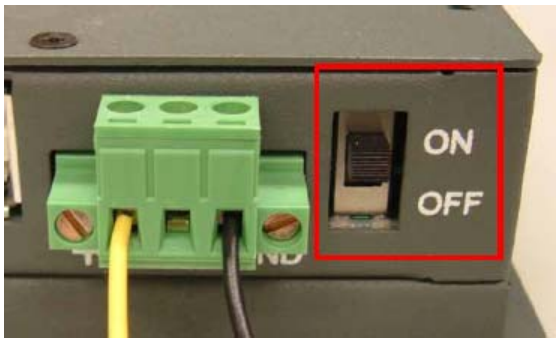

CHAPTER

3

Hardware Functionality

This chapter details hardware's specification and functionality in the SPC-101

This chapter will detail hardware setting and functionality in the SPC-101.

3.1 Hardware Specification

The main board of SPC-101 is a 160mm x 122 mm x 25mm single board computer with the Intel® PXA270 processor running at 312 MHz. The mini-watt power consumption by its kernel makes the SPC-101 suitable for power conscious applications.

3.1.1 Specification

Model		SPC-101
Kernel part	CPU	Intel® PXA270 processor at 312 MHz
	Display Chip	Intel® Marathon 2700G5 with independent 32MB display memory
	System memory	64MB SDRAM
	Boot memory	1MB NOR flash
	Storage memory	64MB M-systems NAND flash for image and AP storage
	WDT	PXA-270 internal

	RTC	HT-1381 with rechargeable coin battery
	Power input	DC 10V~28V, Max. 1A with power protect (protect for over voltage, over current & 2A short circuit fuse).
	OS	Microsoft® Windows® CE.NET 5.0
I/O ports	Serial ports	One full-function RS-232 port and one software configurable RS-485/RS-232 -COM1 full-function transceiver level RS-232 -COM3 software configurable transceiver level RS-485/RS-232, in which, RS-232 is 2-wire(TX, RX)
	Ethernet	10/100 BASE-T ethernet port
	USB host port	2x USB 1.1 host by connector
	Audio	Stereo line-out
	SD/MMC	Support SD/MMC memory and SDIO card
Expansion port	DI & DO	4 digital input pins & 4 digital output pins. All are TTL level.
	Hotkey	8 hotkeys, can be configured as LVCMOS level input or output by software
	Line-out	Stereo line-out
	Line-in	Stereo line-in
	Microphone	Mono microphone
	SM Bus	Clock, Data pins
	RS-232	COM2: full-function transceiver level RS-232
	USB	USB 1.1 Host
	Power	5V and 3.3V, Imax = 200mA
Display	LCD	10.4” TFT LCD. Resolution SVGA 800 x 600
System Part	Inverter	12Vdc CCFL inverter

	touch-screen	4-wire resistive T/S
	Backup battery	ML2032 rechargeable coin battery 65mA For RTC
	LED Indicator	LAN link, LAN speed 10/100 LED indicator.
	SW reset	Through system configurator to execute the SW reset
Environment	Operating temperature	0~50°C (32°~140°F)
	Operating humidity	0%~90% Relative humidity

3.1.2 C*onnectors and Switch*

This section locates connectors and switch of the SPC-101 and describes their functionality. Abut the detail pin assignment, please refer to below.

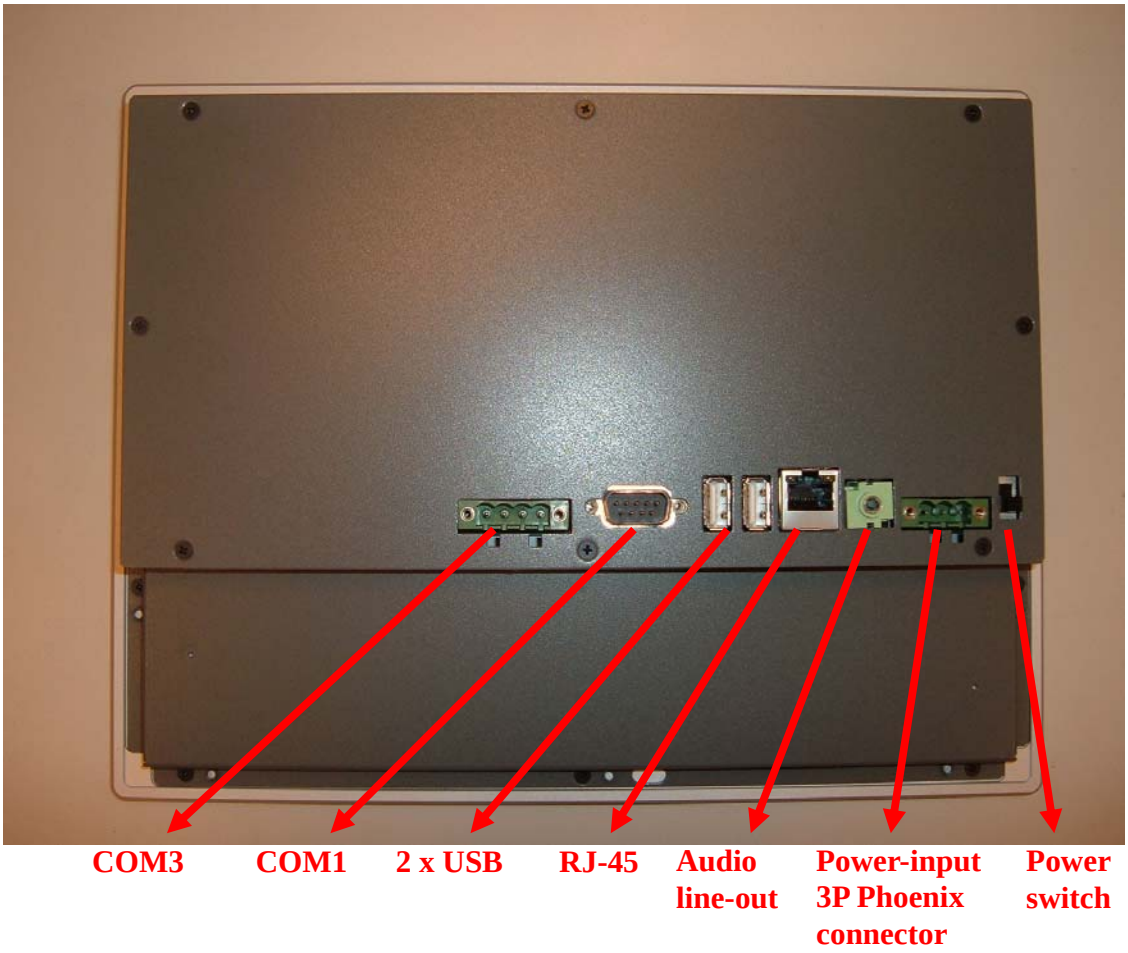

Figure 3.1: Power switch, power-input phoenix connector, RJ-45, USB, COM1 and COM2 of the SPC-101 from rear view

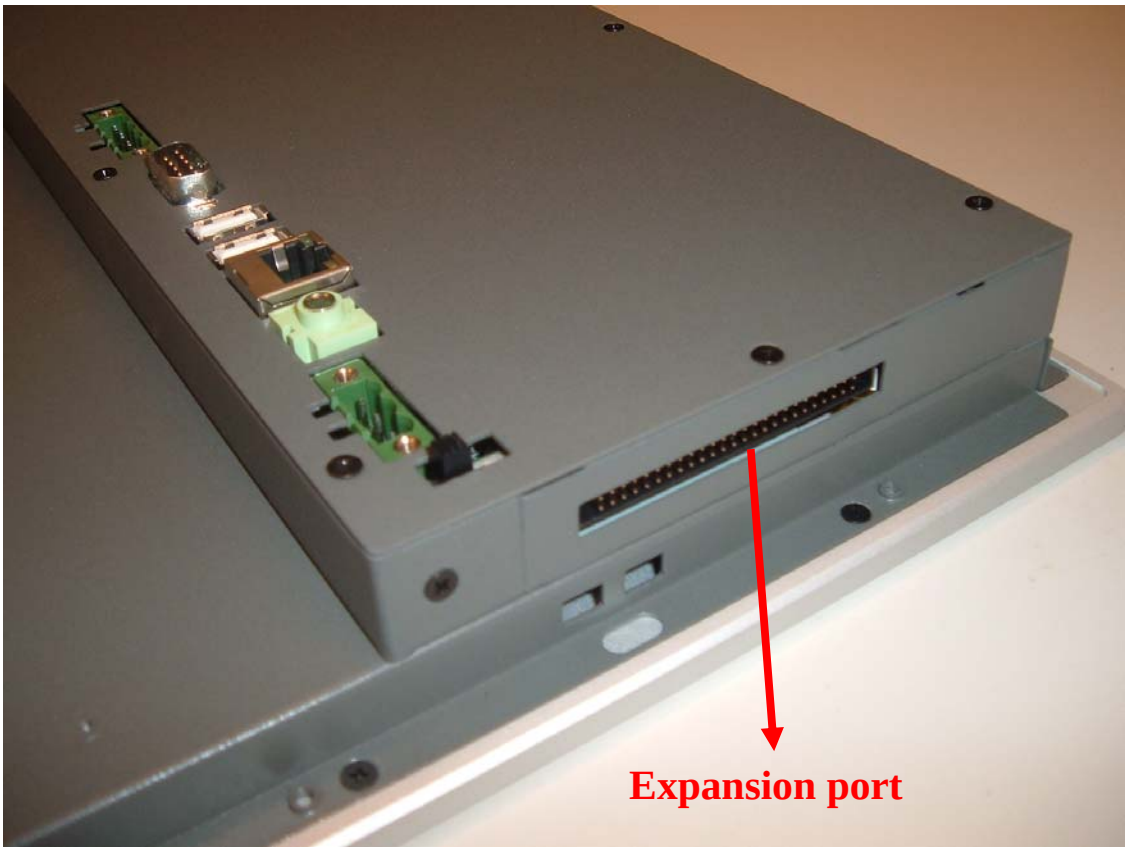

Figure 3.2: Expansion port of the SPC-101

Figure 3.3: SD/MMC slot of the SPC-101

Table 3.1 Connector description

Connector type	**Function**
3P phoenix connector	DC 10-28V power input
Switch	Power-input switch that turn-on or turn-off the SPC-101
RJ-45	10/100 Base-T ethernet connector
USB1	USB host type-A connector
USB2	USB host type-A connector
DB9	COM1 full-function RS-232 DB9 connector
4P phoenix connector	COM3 software configurable RS-485/RS-232

2x25 pin header	Function described as expansion port in Chapter 3.1.1
Audio jack	Stereo line-out
SD/MMC slot	SD/MMC memory card or SDIO card

3.1.3 Connectors pin definition

The following tables are the pin definition of all the connectors and switch on the SPC-101.

- Switch: Power-input switch

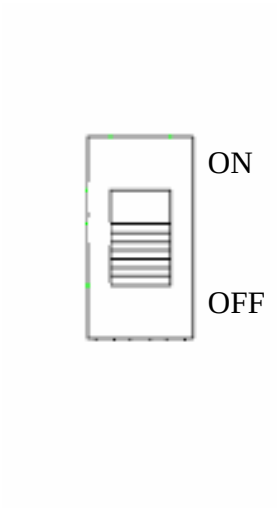

- **3P Phoenix connector: Power input connector**

Pin Number	Pin function	Ps.
1	DC_IN(+)	positive pole of power input
2	DC_IN(-)	negative pole of power input
3	GND	Earth ground

Note: The 3P phoenix connector is the main power input port. The DC input range is 10Vdc ~ 28Vdc. **(Connector manufacturer: DECA, model name: ME060-50803 and the mating model name is MC101-50803)**

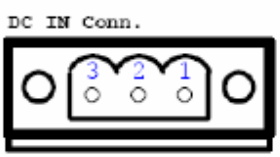

Figure 3.4 DC Power input 3P phoenix connector

● Audio (Line-out) port

Pin	Signal
1	GND
2	Left channel
3	Right channel

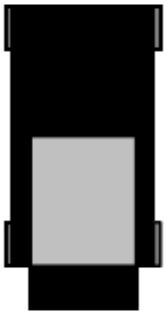

Figure 3.5 Audio (line-out) port

● RJ-45 connector

Pin	Signal
1	TX+
2	TX-
3	RX+
4	N/C
5	N/C
6	RX-
7	N/C
8	N/C

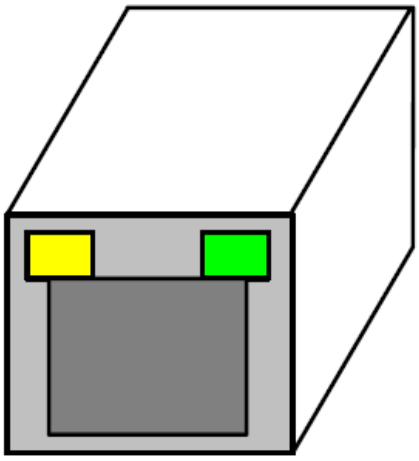

Figure 3.6 RJ-45 for Ethernet port

- **USB1**: Type-A USB host connector

Pin	Signal
1	5V
2	D-
3	D+
4	GND

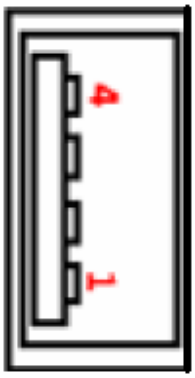

Figure 3.7 USB Host port

- **USB2**: Type-A USB host connector

Pin	Signal
1	5V
2	D-
3	D+
4	GND

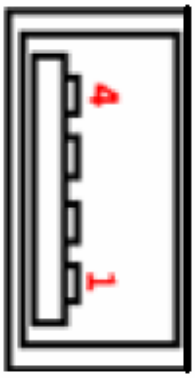

Figure 3.8 USB Host port

● DB9: COM1 full-function RS-232 serial port

Pin	Signal
1	DCD
2	RXD
3	TXD
4	DTR
5	GND
6	DSR
7	RTS
8	CTS
9	RI

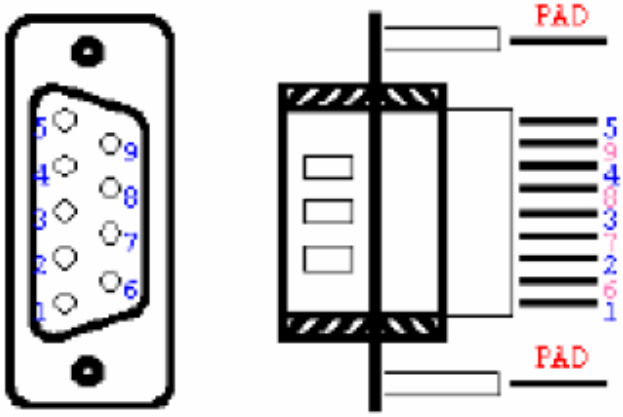

Figure 3.9 COM1(RS-232) serial port

● 4P Phoenix connector: COM3 software configurable RS-485/ RS-232 connector

Pin number	RS-485 pin function	Description
1	D+	Software configure as RS-485
2	D-	Software configure as RS-485
3	NC	No function
4	GND	

Pin number	RS-232 pin function	Description
1	TX	Software configure as RS-232
2	RX	Software configure as RS-232
3	NC	No function

4	GND	

Note: The pin function of the 4P phoenix connector is configured by software. For more details, please reference to Chapter 4. **(Connector manufacturer: DECA, model name: ME060-50804 and the mating model name is MC101-50804)**

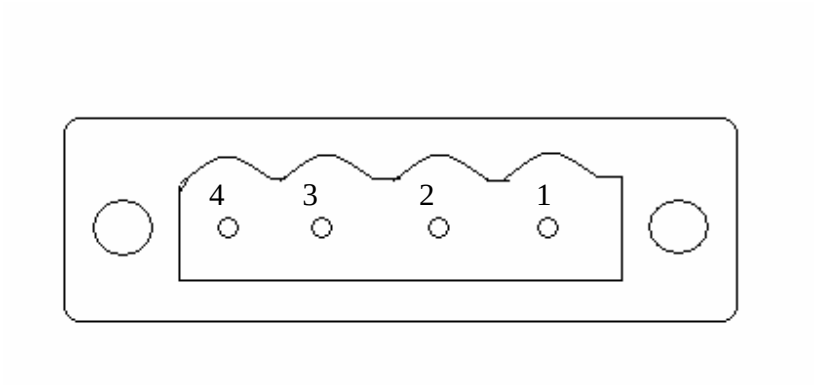

Figure 3.10 4P Phoenix COM3 connector

- 2x25 pin header

Pin Number	Pin function	Remark
1	Line-out Right channel	
2	Line-out Left channel	
3	3.3V	Imax = 200mA
4	Line-out GND	
5	Line-in Left channel	
6	3.3V	Imax = 200mA
7	Line-in GND	
8	Line-in Right channel	
9	5V	Imax = 200mA

10	Microphone GND	
11	Microphone input	
12	3.3V	Imax = 200mA
13	SMBUS Clock	
14	SMBUS Data	
15	GND	
16	GND	
17	Digital output 0	1th pin of DO function
18	Digital output 1	2th pin of DO function
19	Digital output 2	3th pin of DO function
20	Digital output3	4th pin of DO function
21	GND	
22	GND	
23	Digital input 0	1th pin of DI function
24	Digital input 1	2th pin of DI function
25	Digital input 2	3th pin of DI function
26	Digital input 3	4th pin of DI function
27	5V	Imax = 200mA
28	3.3V	Imax = 200mA
29	Hotkey 1	1th pin of hotkey function
30	Hotkey 2	2th pin of hotkey function

31	Hotkey 3	3th pin of hotkey function
32	Hotkey 4	4th pin of hotkey function
33	Hotkey 5	5th pin of hotkey function
34	Hotkey 6	6th pin of hotkey function
35	Hotkey 7	7th pin of hotkey function
36	Hotkey 8	8th pin of hotkey function
37	COM2: RI	COM2
38	NC	Reserved
39	COM2: RTS	COM2
40	COM2: CTS	COM2
41	GND	COM2
42	COM2: DSR	COM2
43	COM2: TX	COM2
44	COM2: DTR	COM2
45	COM2: DCD	COM2
46	COM2: RX	COM2
47	USB Host: GND	USB Host
48	USB Host: 5V	USB Host
49	USB Host: D-	USB Host
50	USB Host: D+	USB Host

Note: The 2x25 box header connector is 2.0mm pitch.
* N.C. means non-connection

CHAPTER

4

Software Functionality

This chapter details the Windows® 5.0 operating system on the SPC series platform.

Sections include:

- Introduction
- Windows® CE Startup Procedure
- Upgrade Procedure
- Utilities
- Network
- M-System Persistent Storage Manger
- Application Program Development
- Windows® CE 5.0 Require Components

4.1 Introduction

The SPC series platform is one embedded system with Windows® CE 5.0. The Windows® CE 5.0 is a compact OS that occupies less storage space or system resources compared with other operating systems such as Windows® NT or Windows® XP. By its modular nature, it is possible to choose those functions that are useful for specific application. Not only reducing the system resources required, but also reduces start-up time. In the field of embedded applications, this is an appealing feature because the impact of downtime would be minimized.

Furthermore, the small storage space it needs makes OS on solid-state disk possible, which implies higher robustness to harsh environments.

Figure 4.1 Windows® CE 5.0 on the SPC series platform

4.2 Windows CE Startup Procedure

Windows CE image can be loaded by two methods, first way is by Compact Flash / SD / MMC storage card, and second way is by system on-board flash chip. Storage card is high boot priority than on-board system flash chip. In BOOTLOADER criteria, it will first read the Windows CE image from external storage card. After download image done, booloader will burn image to on-board flash chip automatically. If external storage card is unavailable or no Windows CE image inside, BOOTLOADER will load the Windows CE image from on-board system flash chip. BOOTLOADER copy Windows CE image to DRAM and launch WinCE from DRAM, whenever loaded by external storage card or system on-board flash chip.

4.3 Upgrade Procedure

Advantech release two images for SPC series platform. EBOOT.NB0 is bootloader and NK.BIN is WinCE5.0 image.

You can upgrade image by following two ways :

a) Upgrade image via bootloader.

b) WinCE upgrade utility.

4.3.1 Upgrade image via bootloader

Bootloader image will be able to support image download then burn it to on-board flash chip automatically. You just copy EBOOT.NB0 or NK.BIN image to storage card separately then reboot platform. Platform will automatically load image from storage card next boot time.

1) Bootloader image download

Step 1, Copy EBOOT.NB0 file to CF / SD / MMC storage card.

Step 2, Power on platform.

Step 3, It will automatically read EBOOT.NB0 from storage card and then burn it to on-board boot ROM.

2) NK image download

Step 1, Copy NK.BIN file to CF / SD / MMC storage card. You needs to make sure EBOOT.NB0 doesn't exist in storage card in advance.

Step 2, Power on platform.

Step 3, It will automatically read NK.BIN from storage card and then burn it to on-board flash chip.

4.3.2 Upgrade image via WinCE upgrade utlity

After the OS image was built, we may want to burn it to on-board system flash chip. Advantech provides the upgrade utility "Upgrade" to upgrade bootloader image, WinCE image or boot logo to onboard flash chip. The upgrade procedure is described as following :

Step1, Copy "Upgrade" utility and image files you want (For example : NK.BIN, EBOOT.NB0, and windowsce.bmp) to CF/SD/MMC storage card.

Step2, Insert storage card to SPC platform, and then launch Upgrade.exe.

Figure 4.2 Image files and upgrade utility in storage card

Step3, Check the items you want to upgrade as the figure shown below. If you want to upgrade boot logo, you can key in the path of the bitmap file in the edit box or click 'Browse' button to select the file.

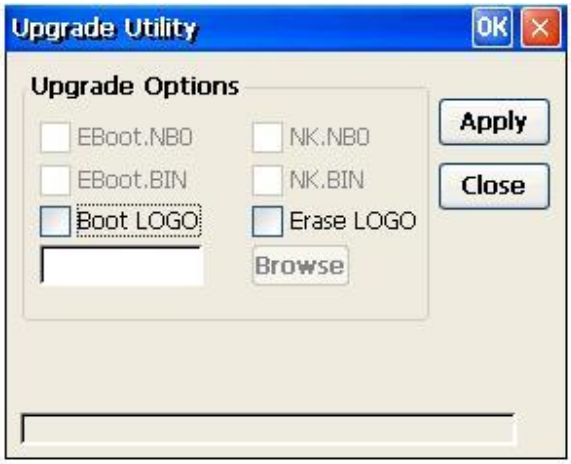

Figure 4.3 Upgrade utility for burn image to flash ROM

Step4, Press 'Apply' button on the dialog. Then the items you select will be upgraded to the flash ROM. After the upgrading process has finished, reboot system.

4.4 Utilities

There are several useful utilities added in the standard Windows® CE 5.0 :

4.4.1 Test Utility

The utility “AdvDiag.exe” is one integrated test tool, which includes the function validation for peripheral. You can use this tool to verify whether the peripheral function work or not. You just copy this utility to storage card and then launch from WinCE by double click it.

Main Function :

Item	Function Description
COMx (LOOPBACK)	Lookback test for COM1 ~ COM3
COMx <=> COMy	Two COM ports RS232 transmission
TOUCH SCREEN	Touch Screen function validation
Audio Play	Audio play function validation
Audio Record	Audio record function validation
USB Keyboard	USB Keyboard function validation
USB Mouse	USB Mouse function validation
WATCHDOG Timer	Watchdog timer validation
Backlight Test	Backlight function validation
Read MAC ID	Read MAC ID
Power Properties	Get power information
DIO Control	DIO function validation
PAUSE	Pause test process
REPEAT TEST	Repeat test process
Etc ……	

Test Procedure :

You should see a lot of test items in left zone after launch this utility. You can insert enough test items you want to right zone by pressing “Add” button. The test items in right zone will be executed. Also, you can remove test items from right zone by pressing “Remove” button.

After you add test items done, you can go function test by pressing “EXE ALL” button. To press “View Rpt” button, you will see the test result.

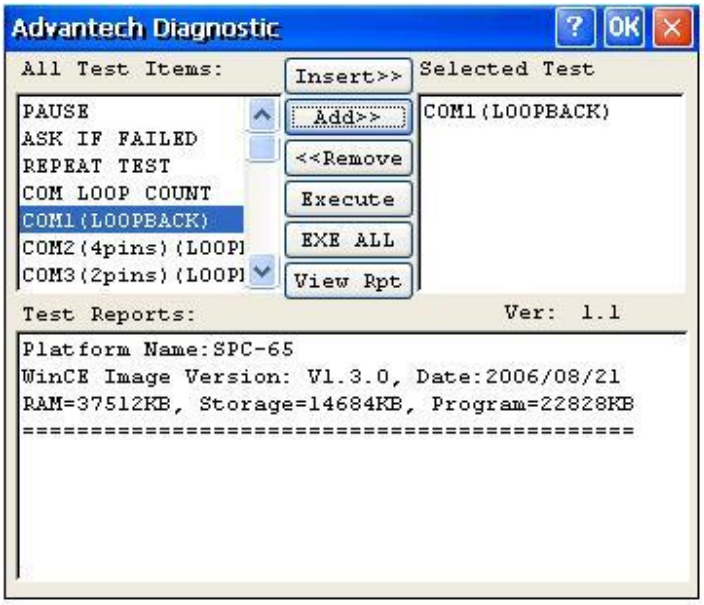

Figure 4.4 Test Utility

4.4.2 Startup execution

The SPC platform has a useful function call "Startup execution". After the system boot up, the startup execution function would automatically perform. This function is useful for control system to do the initialization processes or some other procedures. In SPC platform, there are two ways to perform "Starup" function.

Method 1:

Step1: Create "startup" directory in CF/SD/MMC storage card, USB disk or in "\DiskOnChip\".

Step2: Copy executable files to "startup" directory that is created by Step 1.

Example:

We copy two executable files "softreset.exe" and "Notepad.exe" in "\DiskOnChip\Startup", and then reboot the system. After the system boot up, the two executable file would automatically execute.

Method 2:

Step1: Create "startup" directory in CF/SD/MMC storage card, USB disk or in "\DiskOnChip\".

Step2: Create a file called "startup.ini" in "startup" directory. Type in the commands you want to execute after boot up in that file.

Example:

Create "Startup.ini" in "\DiskOnChip\Startup" directory and reboot the system. The content of startup.ini was listed below:

\windows\tty.exe

\windows\registry.exe

After the system reboot, "\windows\ tty.exe" and "\windows\ registry.exe" would automatically execute. Be sure that the two methods are independent. It means they can be used simultaneously.

4.4.3 Safemode

SPC allow user to alter registry setting, and save it by either API “RegFlushKey” or the “Save” registry button of the “Misc” page of the “Platform Setting”. But sometimes user may make some non-appropriate registry setting, and causes SPC fail to boot. In this circumstance, the easiest way to boot up SPC platform is to use the default registry setting from the Windows® CE 5.0 image. When the SPC platform is booted up with the default registry setting, we say that it is working in "safemode". To enter "safemode", user must perform several steps as described below:

Step 1: Create a file whose filename is "safemode" or a folder whose name is "safemode" in the CF/SD/MMC storage card.

Step 2: Insert the CF/SD/MMC card into the SPC series platform.

Step 3: Turn on the power switch of SPC series platform.

Or, customer can press “Clean” button of Misc page in Platform Setting also.

4.4.4 Platform Setting

Platform Setting utility is an outstanding utility designed by Advantech Windows® CE software team. It is an integrated environment where user can get useful system information as well as configure favorite system settings and apply system control function on demand. Double click the icon of Platform Setting on the desktop. Platform Setting is also put on Control Panel. Following sections illustrate the functions of Platform Setting.

4.4.4.1 General

It shows the memory information including DRAM and DiskOnChip. Platform name and version control are also put here.

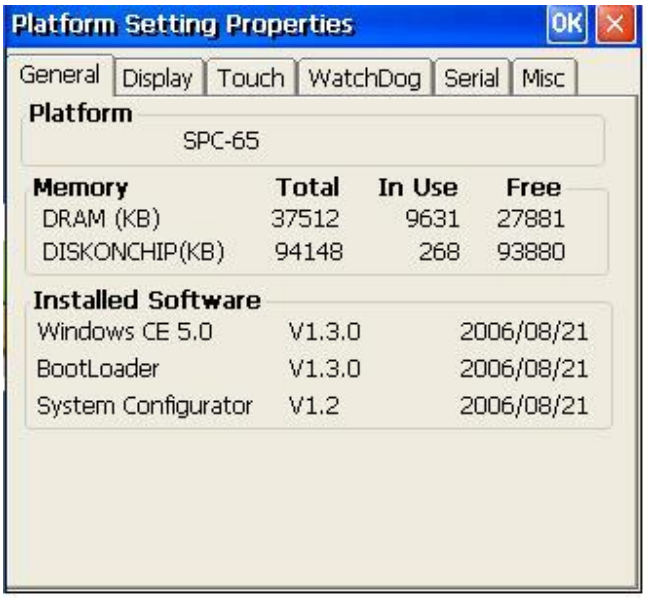

Figure 4.5 General information

4.4.4.2 Display

From time to time it is unnecessary to turn on the display attached to the SPC all the day. The Display page provides several frequently used functions such as turning off the LCD and backlight to elongate the display repair period, adjusting brightness. Besides, user can click the "Off Now" button to turn off the backlight of the display panel immediately without waiting. Once the backlight was turned off, there were three inputs to turn it on: (1) mouse; (2) keyboard; (3) touch-screen; user can use any one of them to turn on the display. The lower “Brightness” block has scroll bars by which users can tune brightness level of TFT LCD.

Figure 4.6 Display configuration

4.4.4.3 Touch-screen

The Touch-screen page provides the calibration function. Click the "calibration" button, the "Stylus Properties" windows would appear. Then click "calibrate" button in the Stylus Properties window to enter calibration process. In the calibration process, user taps on the center of the target on the screen then the target will move to the next position. After calibration, press "OK" to leave Stylus Properties window, and then it will save calibration setting to registry persistently.

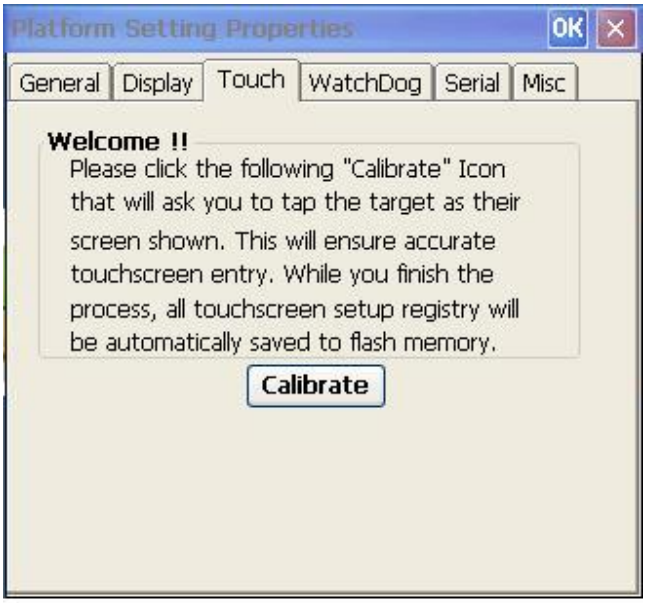

Figure 4.7 Touch Calibration

4.4.4.4 WatchDog timer

It is important in industrial applications that the control systems are rarely crashed, or are capable of self-reset if they are halted somehow. Watchdog function of automatic resetting system is therefore provided in SPC. There is a timer inside the watchdog function. User's AP could invoke the associated APIs in Watchdog function to start the timer, then Watchdog function would repeat the countdown of the specified period of time to reboot the system if the user's AP does not clear the timer in time periodically. The Watchdog function in the SPC provides eight different time intervals: 2 seconds, 5 seconds, 10 seconds, 30 seconds, 60 seconds, 2 minutes, 5 minutes and 10 minutes. The "Enable" button is used to start the Watchdog function. Press the "SoftReset" button will cause system warm boot, reloads all drivers and refresh the newest registry settings. Press the "REBOOT" button will cause the system cold boot. Press RTC TIME start button, it will get real RTC value from RTC chip.

Figure 4.8 Watchdog timer

4.4.4.5 Serial

COM 2 of SPC has multiple serial protocol setting supporting.
- SPC-58 / 65 support RS232, RS485 and RS422 for COM2
- SPC-101 support RS232 and RS485 for COM2.

By this setting, customer can dynamically switch the protocol of COM2. After the changed, system will reboot automatically. Next boot, your new COM2 setting will be available.

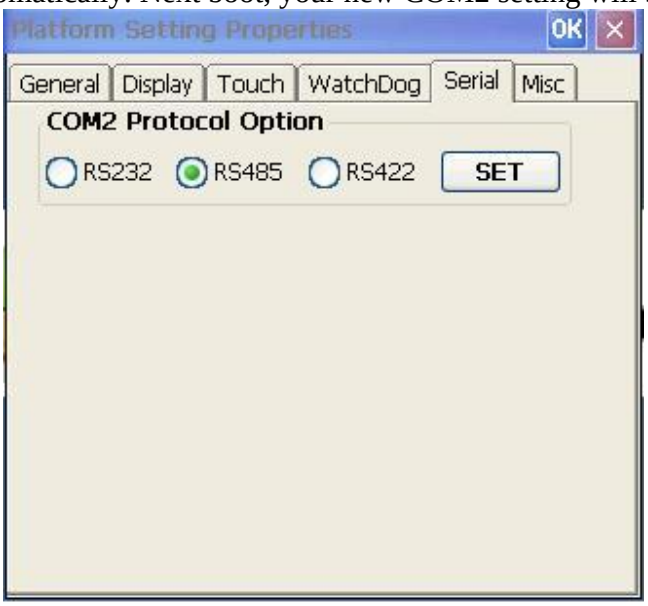

Figure 4.9 Serial settings

4.4.4.6 Miscellaneous

The Misc page provides several functions as described below. The "Registry" block provides registry save and registry clean function. Pressing “Save” button, the registry settings will be saved to persistent storage as DISKONCHIP. Pressing “Clean” button, the registry setting will return to default settings. The “A.Sync” button invokes ActiveSync to the host computer. The "MAC ID" block shows the network MAC address. The Memory Management block will check if memory size needs to be allocated automatically during boot. Once this is checked, program memory will be allocated half size of memory, and storage memory will occupy the rest.

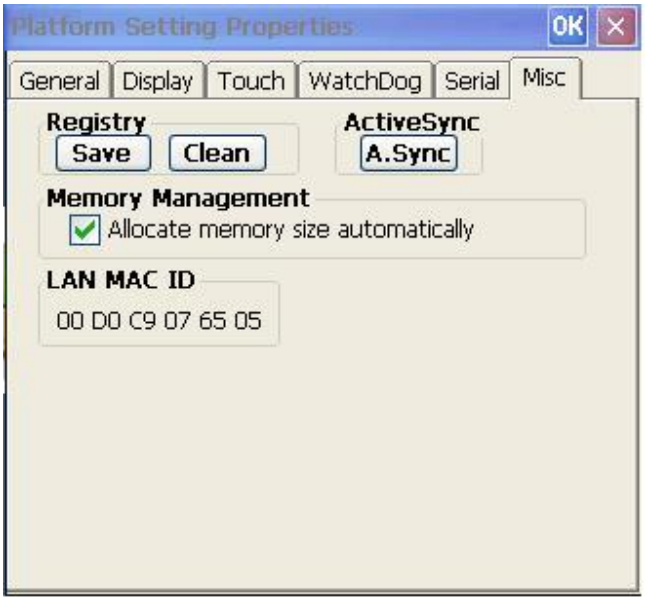

Figure 4.10 Miscellaneous settings

4.4.5 Hotkey Utility

SPC provide 8 sets Hotkey through external cables. Hotkey will be able to launch relative application once you press it, but you need to configure your Hotkey setting in advance. Thus, Advantech have one “Hotkey Configurations” utility in Control Panel let customer configure their Hotkey setting.

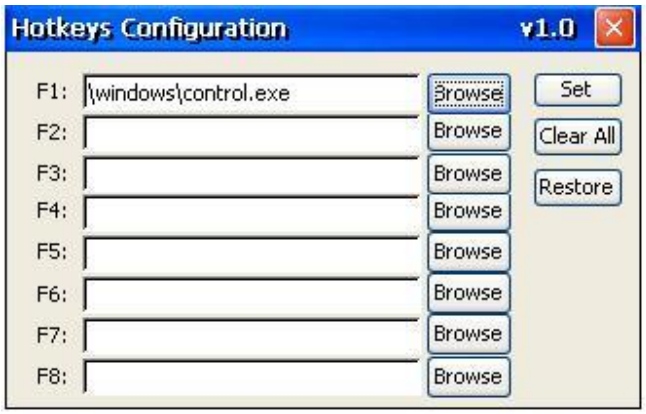

Figure 4.11 Hotkeys Configurations

4.5 Network

SPC build in one 100Base-T Ethernet controller. It appears at “Control Panel/Network and Dial-up Connections” via “DM9CE1”. User can configure its Ethernet support as follows:

1. Click "Start/Settings/Control Panel"

2. Double click "Network and Dial-up Connections"

3. If the SPC is a node of the LAN with DHCP servers, it is now available.

4. If the SPC is a node of the LAN with fixed IP, the user has to consult with MIS to get specific IP addresses. Then fill them into the associated fields of the Properties Dialog. Then press registry save button to save this changed registry persistently. Reboot the system, the Ethernet functions would be available as previous configuration.

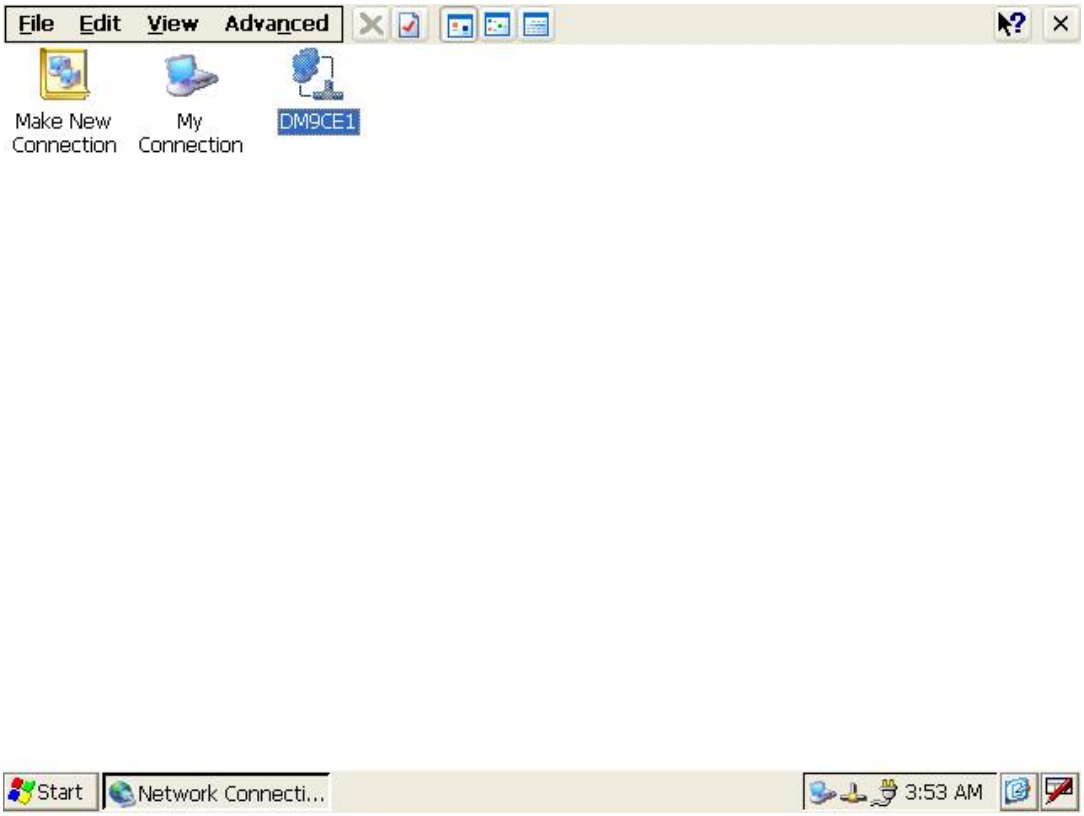

Figure 4.12 Networking via Ethernet

4.6 M-System Persistent Storage Manger (DiskOnChip)

4.6.1 Introduction to M-System Persistent Storage Manger

M-System Persistent Storage Manager was designed and developed specifically as an enhancement to Microsoft Windows CE operating systems. DiskOnChip eliminates extra disk-like storage such as storage cards, redundant RAM and ROM.

4.6.2 DiskOnChip folder in SPC Series

SPC uses M-System Persistent Storage Manger to utilize the free space of flash ROM for persistent storage. The DiskOnChip region in the system is located in "\DiskOnChip" directory. Any file or directory stored in "\DiskOnChip" directory would be keep persistently, even if the power of SPC were turned off. The user can store software or data in \DiskOnChip rather in external storage card to avoid inconvenience.

4.7 Application Program Development

The SPC is bundled with built-in Windows® CE 5.0 operating system. In real applications users need to execute various application programs on it. However, unlike its other family, the Windows® CE 5.0 is a hardware-dependent operating system. That is to say, Windows® CE 5.0 application programs are only portable in the source code level. Users must rebuild the runtime file for a different Windows® CE 5.0 platform even though the source code may not be changed at all.

4.7.1 PC System requirements

• Intel® Pentium-90 CPU or more advanced

• Microsoft® Windows® 2000 Professional or Windows® XP

• Microsoft® eMbedded Visual C++ 4.0 or Virtual Studio 2005

• Platform SDK for SPC

• 64MB DRAM

• CD-ROM drive

• Monitor with VGA resolution at least

• Mouse

• 200MB free hard disk space at least

• SPC series platform

• Let the host PC and SPC connect on the same LAN to do kernel debugging if necessary

• USB cable (bundled in the standard SPC series)

4.7.2 Building Windows CE program

By the platform SDK bundled with the standard SPC, users can build the Windows CE runtime application program by the eMbedded Visual Tools.

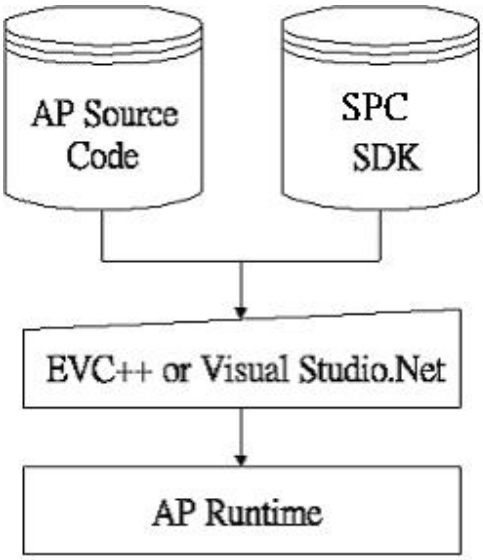

Figure 4.13 Flow-chart of Building Windows® CE 5.0 runtime

4.7.3 How to install SDK

Copy SPC SDK file “PXA270_WCE500_SDK_V101.msi” to your PC, and launch it. You can install SDK by steps.

Step 1, Launch SPC SDK file, and then tap Next button.

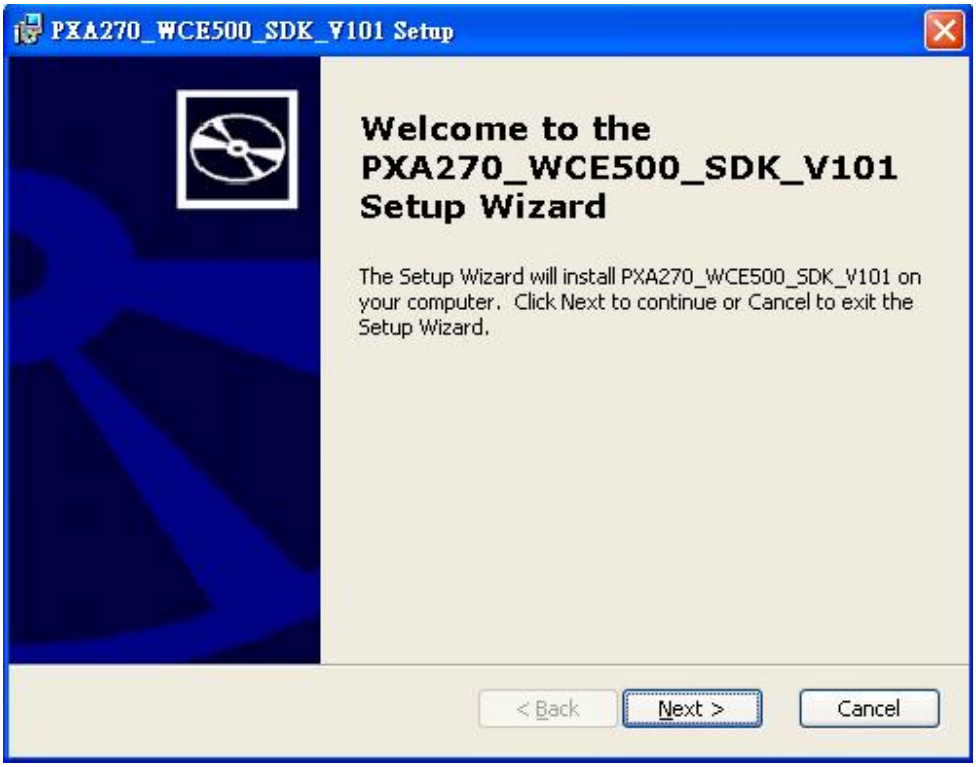

Figure 4.14

Step 2, Accept License Agreement and go next.

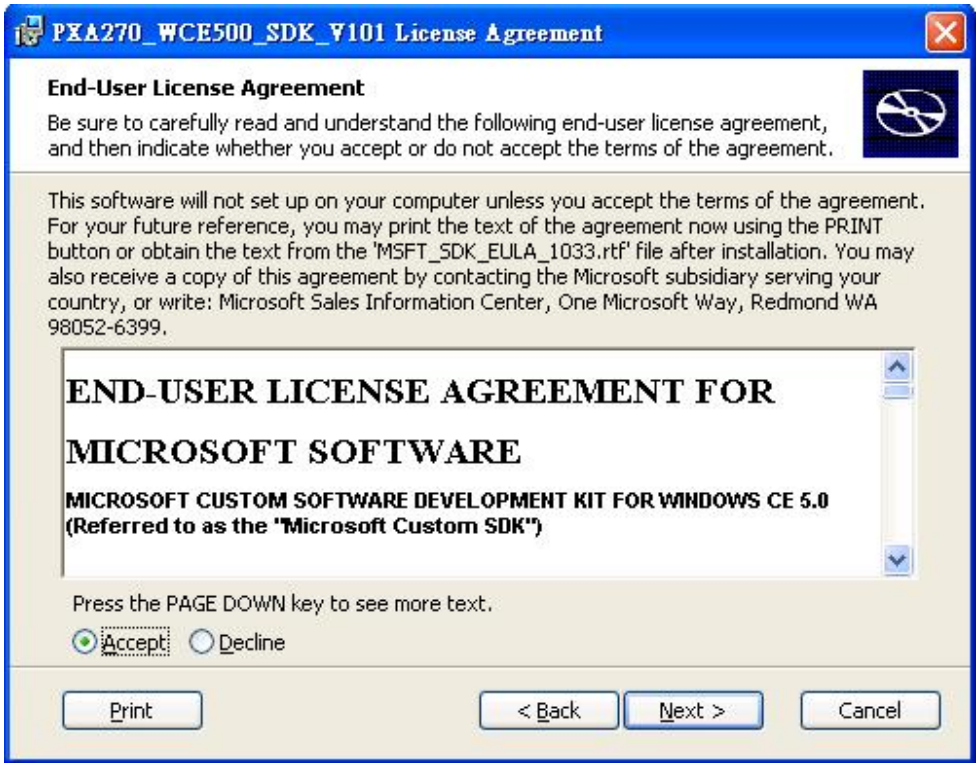

Figure 4.15

Step 3, Key in your information and go next.

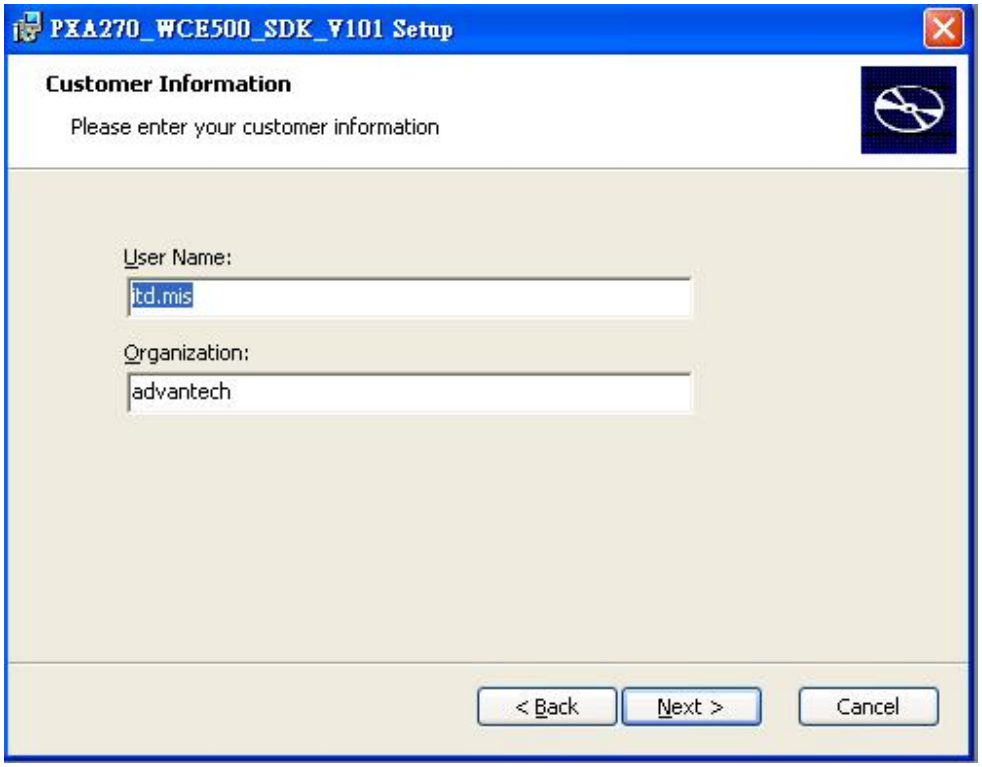

Figure 4.16

Step 4, Choose setup type.

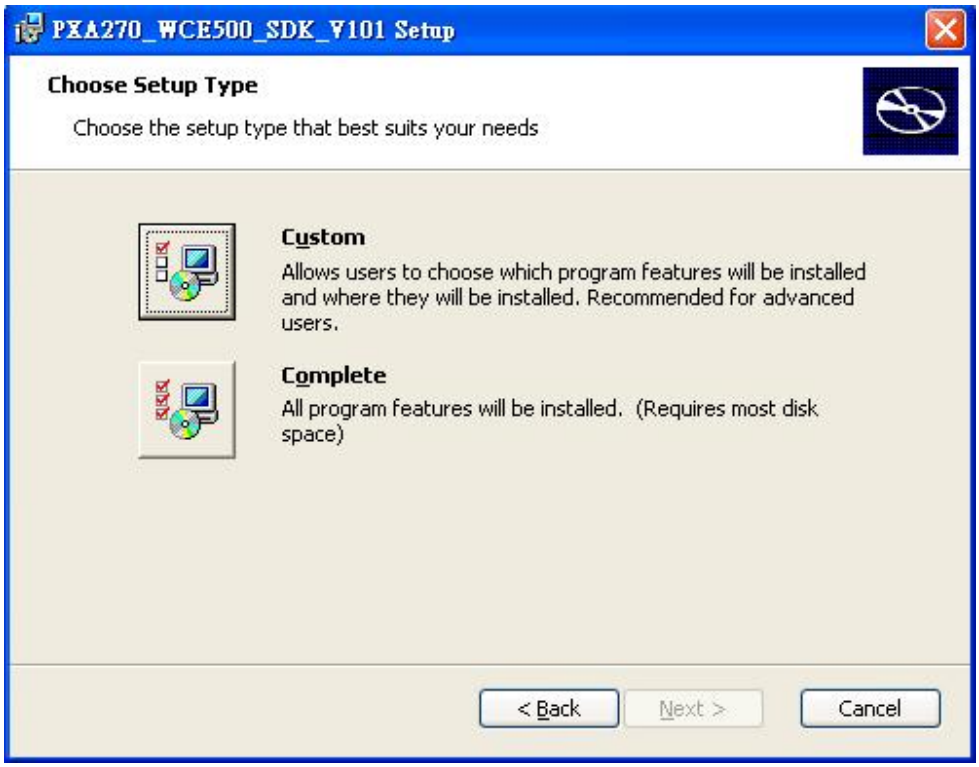
PXA270_WCE500_SDK_V101 Setup
Choose Setup Type
Choose the setup type that best suits your needs
Custom
Allows users to choose which program features will be installed and where they will be installed. Recommended for advanced users.
Complete
All program features will be installed. (Requires most disk space)
< Back
Next >
Cancel

Figure 4.17

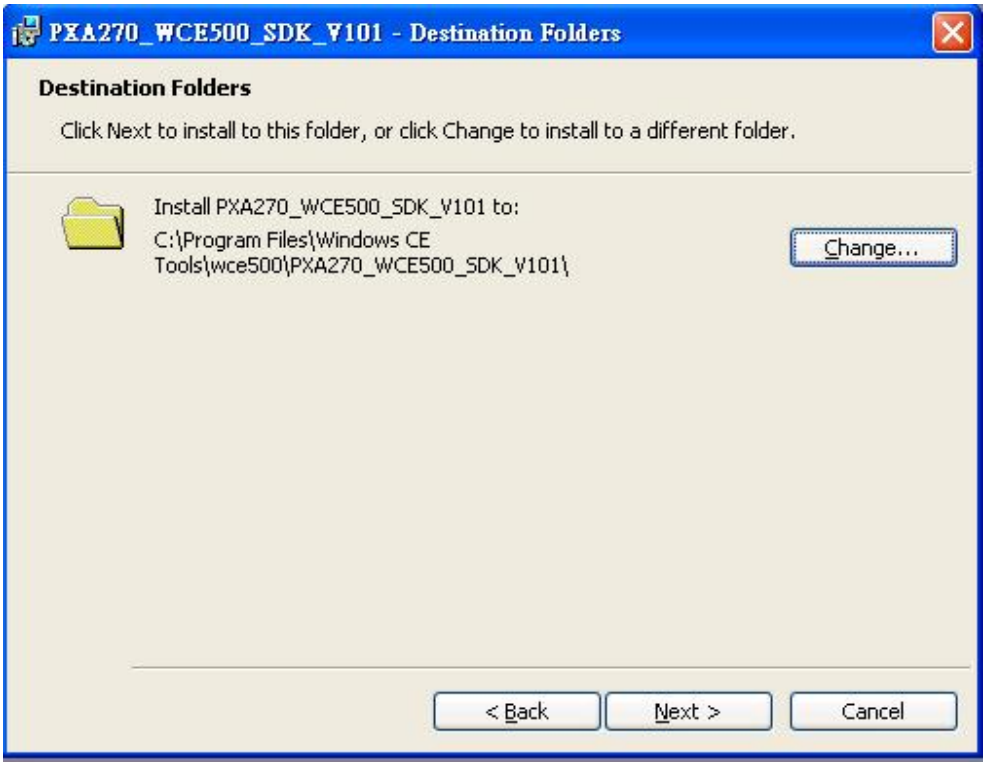
PXA270_WCE500_SDK_V101 - Destination Folders
Destination Folders
Click Next to install to this folder, or click Change to install to a different folder.
Install PXA270_WCE500_SDK_V101 to:
C:\Program Files\Windows CE Tools\wce500\PXA270_WCE500_SDK_V101\
Change...
< Back
Next >
Cancel

Figure 4.18

Step 5, Tap “Install” button to install SDK.

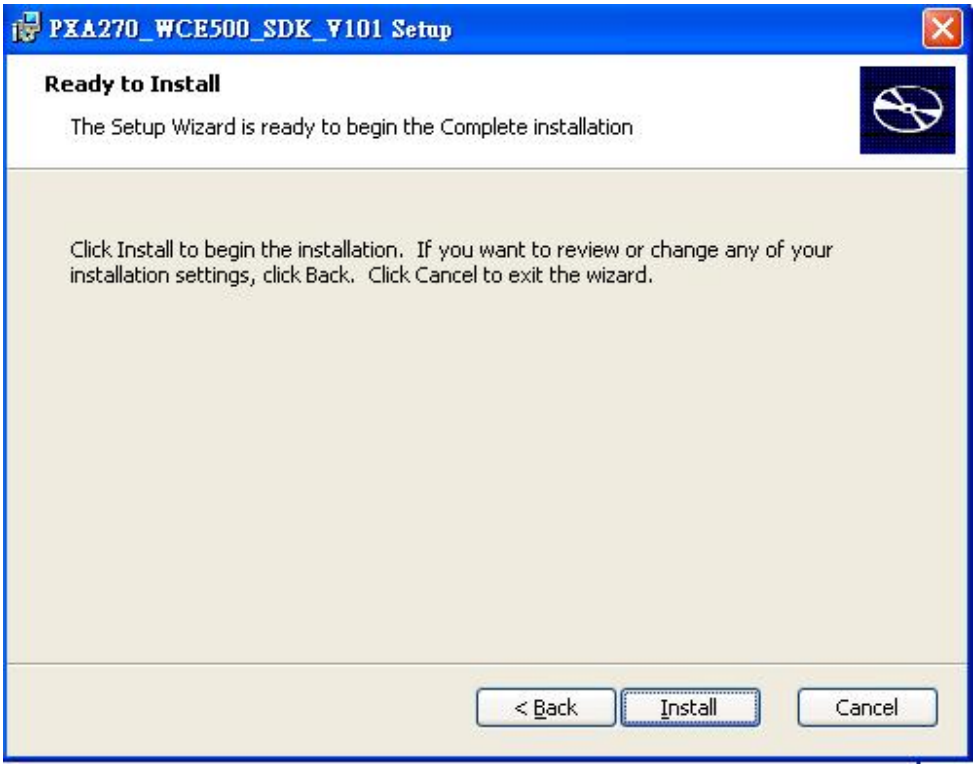

Figure 4.19

Install SDK…….

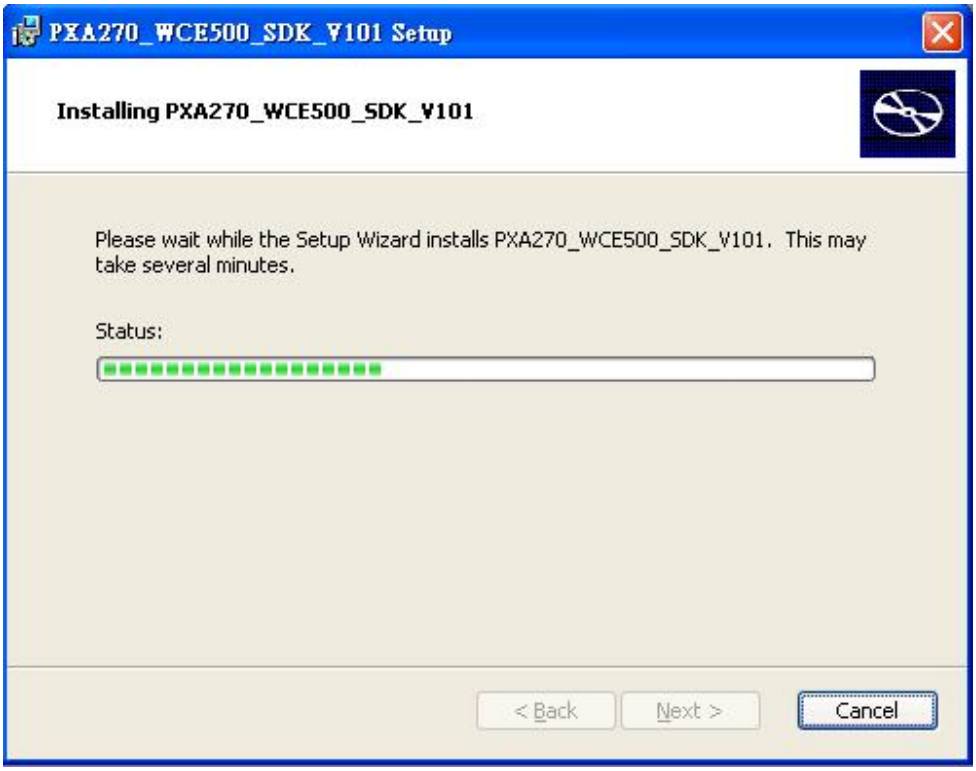

Figure 4.20

Step6, Finish installing.

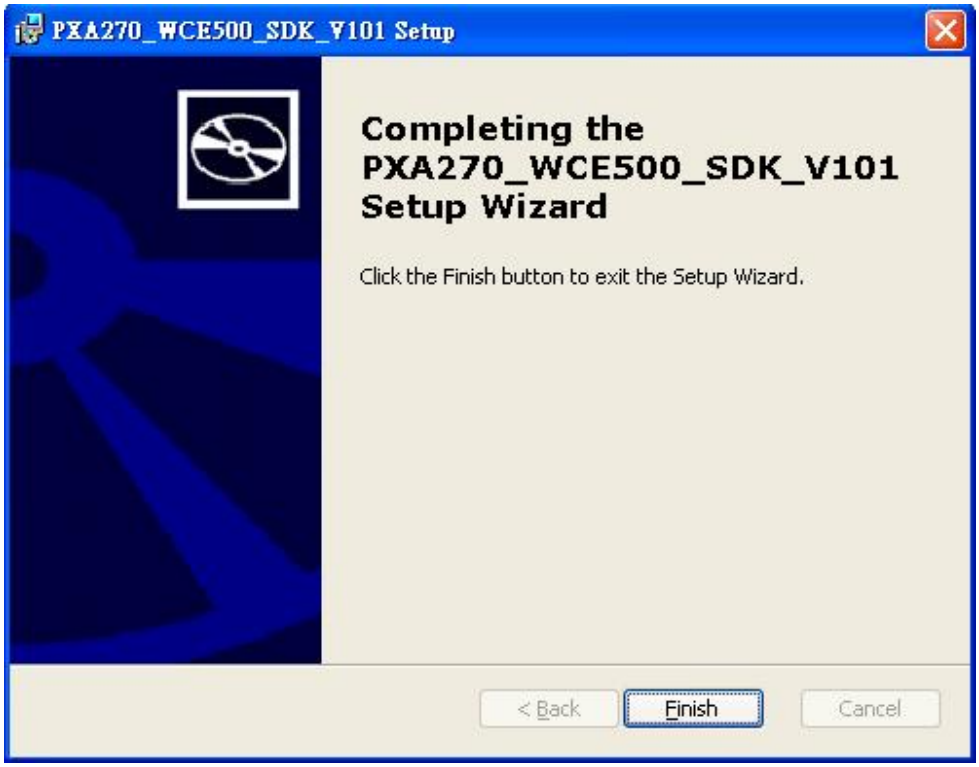

Figure 4.21

4.7.4 Running your application programs

After you implement application code, you should choose Advantech SDK to compile.

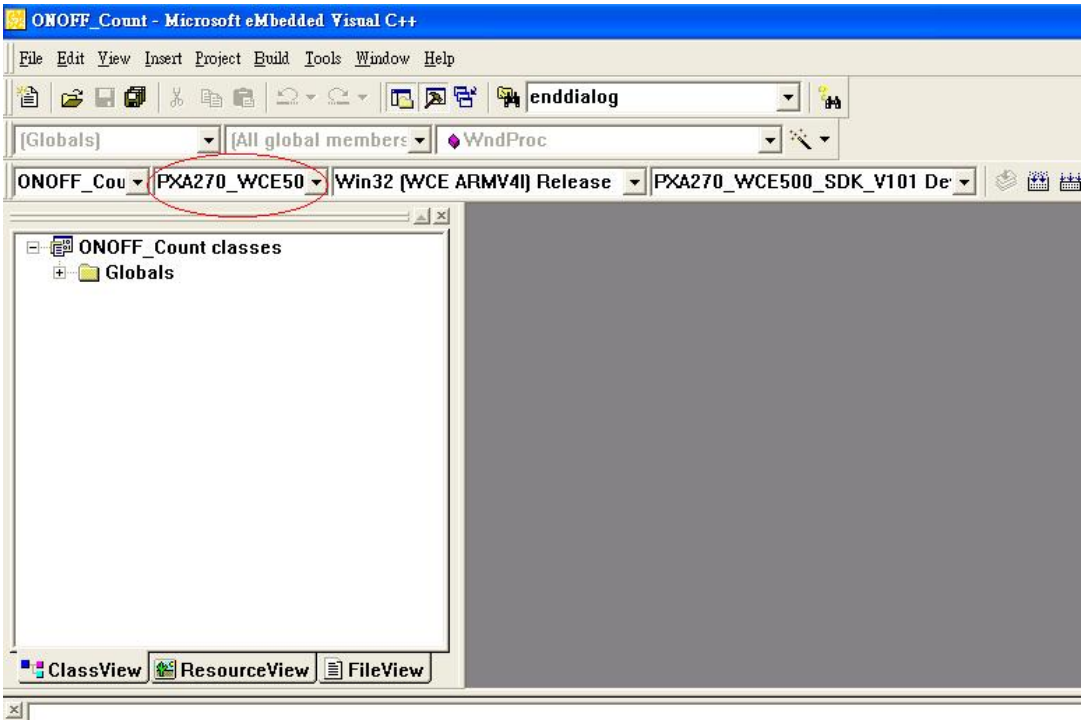

Figure 4.22

4.7.5 AdvLib library for application program

SPC is targeted to be the embedded device for system integrator. System integrator usually access platform relative IO, like backlight control, brightness control, etc. Advantech especially provide one AdvLib static library to system integrator. AdvLib library includes some useful APIs. System integrator just adds it to their application project, and then they can use AdvLib library functions.

AdvLib library package include following content :

1, AdvLib.lib

2, AdvLib.h

3, AdvLib user guide

The functions in AdvLib include :

1, Screen on / off

2, Brightness set / get

3, Watchdog timer set / get / refresh

4, Software / Hardware reset

5, Get bootloader version

6, Digital I/O access

7, LAN MAC address access

4.8 Windows® CE 5.0 Component List

APPLICATIONS AND SERVICES DEVELOPMENT	Core	Professional	Advantech Core	Advantech Professional
Active Template Library (ATL)	x	x	x	x
C Libraries and Runtimes	x	x	x	x
C++ Runtime Support for Exception Handling and Runtime Type Information	x	x	x	x
Full C Runtime	x	x	x	x
Standard I/O (STDIO)	x	x	x	x
Standard I/O ASCII (STDIOA)	x	x	x	x
String Safe Utility Functions	x	x	x	x
Standard String Functions - ASCII (corestra)	x	x	x	x
Component Services (COM and DCOM)	x	x	x	x
Component Object Model	x	x	x	x
COM	x	x	x	x
CoCreateGuid functionality for OLE32	x	x	x	x
COM Storage	x	x	x	x
DCOM	x	x	x	x
COM Storage	x	x	x	x
DCOM Remote Access	x	x	x	x
Minimal COM (No OLE Support)	x	x	x	x
CoCreateGuid functionality for OLE32	x	x	x	x
COM Storage	x	x	x	x
Speech Interface	x	x		
Speech API (SAPI) 5.0	x	x		
Microsoft English (US) Windows CE Speech Recognizer (available in 4.2 only)*		x		
Lightweight Directory Access Protocol (LDAP) Client	x	x	x	x
Message Queuing (MSMQ)	x	x	x	x
SOAP Reliable Messaging Protocol (SRMP)	x	x	x	x
MSMQ ActiveX Wrappers	x	x	x	x
Microsoft Foundation Classes (MFC)	x	x	x	x
Object Exchange Protocol (OBEX)	x	x	x	x
OBEX Server	x	x	x	x
OBEX Inbox	x	x	x	x
OBEX File Browser	x	x	x	x
OBEX Client	x	x	x	x
Pocket Outlook Object Model (POOM) API		x		
SOAP Toolkit	x	x	x	x
Client	x	x	x	x
Server	x	x	x	x
Standard SDK for Windows CE		x		x
.NET Compact Framework	x	x	x	x
OS Dependencies for .NET Compact Framework 1.0	x	x	x	x
Smart Device Authentication Utility	x	x	x	x
.NET Compact Framework 1.0	x	x	x	x

SQL Server CE 2.0 .NET Data Provider	x	x	x	x
SQL Server 2000 .NET Data Provider	x	x	x	x
SQL Server CE 2.0	x	x	x	x
XML	x	x	x	x
MSXML 3.0	x	x	x	x
XML Core Services and Document Object Model (DOM)	x	x	x	x
XML HTTP	x	x	x	x
XML Query Languages (XQL)	x	x	x	x
XML Stylesheet Language Transformations (XSLT)	x	x	x	x
XML SAX	x	x	x	x
XML Error Strings	x	x	x	x
XML Minimal Parser	x	x	x	x
Exchange Client	x	x		
APPLICATIONS - END USER				
ActiveSync		x		
File Sync	x	x	x	x
Inbox Sync		x		
Pocket Outlook Database Sync		x		
CAB File Installer/Uninstaller	x	x	x	x
File Viewers*				x
Microsoft Excel Viewer*				x
Microsoft Image Viewer*				x
Microsoft PDF Viewer*				x
Microsoft PowerPoint Viewer*				x
Microsoft Word Viewer*				x
FLASH Update Sample Application	x	x		
Games	x	x		
Freecell	x	x		
Solitaire	x	x		
Help*		x		x
Inbox		x		
Remote Desktop Connection		x		x
Remote Desktop Protocol (RDP)		x		x
User Interface Dialog Boxes		x		x
Smart Card Redirection		x		x
File Storage Redirection		x		x
Filtered File Storage Redirection		x		x
Cut/Copy/Paste Clipboard Redirection		x		x
Serial and Parallel Port Redirection		x		x
Audio Playback Redirection		x		x
Printer Redirection		x		x
Terminal Emulator	x	x	x	x
Windows Messenger		x		
WordPad		x		x

CORE OS SERVICES				
Battery Driver	x	x	x	x
Display Support	x	x	x	x
Serial Port Support	x	x	x	x
Parallel Port Support	x	x	x	x
Internet Appliance (IABASE) Support	x	x		
Notification LED Support	x	x		
PNP Notifications	x	x	x	x
USB Host Support	x	x	x	x
USB Human Input Device (HID) Class Driver	x	x	x	x
USB HID Keyboard and Mouse	x	x	x	x
USB HID Keyboard Only	x	x	x	x
USB HID Mouse Only	x	x	x	x
USB Printer Class Driver	x	x	x	x
USB Storage Class Driver	x	x	x	x
USB Remote NDIS Class Driver	x	x	x	x
Debugging Tools	x	x	x	x
Keyboard Test Application	x	x		
Touch Driver Test Application	x	x		
Remote Display Application	x	x		
Tiny Kernel Test Sample Application	x	x		
Toolhelp API	x	x	x	x
LMemDebug Memory Debugging Hooks	x	x		
Notification (Choose 1)	x	x		
UI based Notification	x	x		
Non UI based Notification	x	x		
Power Management (Choose 1)	x	x	x	x
Power Management (Full)	x	x	x	x
Power Management (Minimal)	x	x		
Device Manager	x	x	x	x
Kernel Features	x	x	x	x
Target Control Support (Shell.exe)	x	x	x	x
Fiber API	x	x	x	x
FormatMessage API	x	x	x	x
Memory Mapped Files	x	x	x	x
Message Queue - Point-to-Point	x	x	x	x
COMMUNICATIONS SERVICES AND NETWORKING				
Networking Features	x	x	x	x
Domain Discovery	x	x	x	x
Extended DNS Querying and Update (DNSAPI)	x	x	x	x
Secure DDNS	x	x	x	x
Extensible Authentication Protocol	x	x	x	x
Firewall	x	x		
Internet Connection Sharing (ICS)	x	x	x	x
Gateway Logging	x	x	x	x

IPSec v4	x	x	x	x
NDIS Packet Capturing DLL	x	x		
NDIS User-mode I/O Driver	x	x	x	x
Network Bridging	x	x	x	x
Network Driver Architecture (NDIS)	x	x	x	x
Network Utilities (IpConfig, Ping, Route)	x	x	x	x
Reference Gateway User Interface	x	x		
Remote Configuration Framework	x	x		
TCP/IP	x	x	x	x
IP Helper API	x	x	x	x
TCP/IPv6	x	x	x	x
Universal Plug and Play (UPnP)	x	x	x	x
Control Point API	x	x	x	x
Device Host API	x	x	x	x
Device Host API (Minimal Subset)	x	x	x	x
Sample UPnP IGD Schema Implementation	x	x	x	x
UPnP Tools	x	x	x	x
UPnP Audio-Video DCP	x	x	x	x
AV Control Point API	x	x	x	x
AV Device API	x	x	x	x
AV Renderer Sample		x		x
USB Flash Config Tool	x	x		
Windows Networking API/Redirector (SMB/CIFS)	x	x	x	x
Winsock Support	x	x	x	x
Networking - Local Area Network (LAN)	x	x	x	x
Native Wi-Fi WLAN Access Point Components	x	x	x	x
Native Wi-Fi WLAN STA	x	x	x	x
Wired Local Area Network (802.3, 802.5)	x	x	x	x
Wireless LAN (802.11) STA - Automatic Configuration and 802.1x	x	x	x	x
Networking - Personal Area Network (PAN)	X	x		
Bluetooth	x	x		
Bluetooth Protocol Stack with Transport Driver Support	x	x		
Bluetooth Stack with Integrated CSR Chipset Driver	x	x		
Bluetooth Stack with Universal Loadable Driver	x	x		
Bluetooth Stack with Integrated SDIO Driver	x	x		
Bluetooth Stack with Integrated USB Driver	x	x		
Bluetooth Stack with Integrated UART Driver	x	x		
Bluetooth Profiles Support	x	x		
Bluetooth HS/HF and Audio Gateway Service	x	x		
Bluetooth LAP and Configuration Utility		x		
Bluetooth DUN Gateway	x	x		
Bluetooth PAN	x	x		
Bluetooth HID Device Support	x	x		
Bluetooth HID - Keyboard	x	x		

Bluetooth HID - Mouse	x	x		
IrDA	x	x		
Networking - Wide Area Network (WAN)	x	x	x	x
Dial Up Networking (RAS/PPP)	x	x	x	x
AutoDial	x	x	x	x
Standard Modem Support for Dial Up Networking	x	x	x	x
Point-to-Point Protocol over Ethernet (PPPoE)	x	x	x	x
Telephony API (TAPI 2.0)	x	x	x	x
Unimodem support	x	x	x	x
Virtual Private Networking	x	x	x	x
PPTP	x	x	x	x
L2TP/IPSec	x	x	x	x
Servers	x	x	x	x
Core Server Support	x	x	x	x
FTP Server	x	x		
File Server	x	x		
File Server Customizable UI	x	x		
Windows Peer-to-Peer Networking	x	x		
Peer Name Resolution Protocol (PNRP)	x	x		
Identity Manager	x	x		
Print Server	x	x		
RAS Server/PPTP Server (Incoming)		x		
Telnet Server	x	x		
Web Server (HTTPD)	x	x	x	x
Active Server Pages (ASP) Support	x	x	x	x
JScript 5.6	x	x	x	x
VBScript 5.6	x	x	x	x
Device Management ISAPI Extension	x	x	x	x
WebDAV Support	x	x	x	x
Web Server Administration ISAPI	x	x	x	x
Web Proxy	x	x		
Parental Controls	x	x		
Simple Network Time Protocol (SNTP)	x	x		
SNTP Server	x	x		
SNTP Client with DST	x	x		
SNTP Automatic Updates and Server Synchronization	x	x		
DEVICE MANAGEMENT				
Device Management Client	x	x		
Simple Network Management Protocol (SNMP)	x	x		
FILE SYSTEMS AND DATA STORE				
Compression	x	x	x	x
Database Support	x	x	x	x
File and Database Replication (Choose 1)	x	x	x	x
Bit-based	x	x	x	x
Count-Based	x	x		

File System - Internal (Choose 1)	x	x	x	x
RAM and ROM File System	x	x	x	x
ROM-only File System	x	x		
Registry Storage (Choose 1)	x	x	x	x
Hive-based Registry	x	x	x	x
RAM-based Registry	x	x		
Storage Manager	x	x	x	x
Binary Rom Image File System	x	x		
Storage Manager Control Panel Applet	x	x	x	x
EDB Database Engine	x	x		
Partition Driver	x	x	x	x
CD/UDFS File System	x	x	x	x
FAT File System	x	x	x	x
Transaction-Safe FAT File System (TFAT)	x	x		
System Password	x	x	x	x
FONTS				
Arial	x	x		
Arial (Subset 1_30)	x	x		
Arial Black	x	x		
Arial Bold	x	x		
Arial Bold Italic	x	x		
Arial Italic	x	x		
Comic Sans MS	x	x		
Comic Sans MS	x	x		
Comic Sans MS Bold	x	x		
Courier New	x	x	x	x
Courier New (Subset 1_30)	x	x	x	x
Courier New Bold	x	x		
Courier New Bold Italic	x	x		
Courier New Italic	x	x		
Georgia	x	x		
Georgia	x	x		
Georgia Bold	x	x		
Georgia Bold Italic	x	x		
Georgia Italic	x	x		
Impact	x	x		
Kino	x	x		
MSLogo	x	x		
Symbol	x	x	x	x
Tahoma	x	x	x	x
Tahoma (Subset 1_07)	x	x	x	x
Tahoma Bold	x	x		
Times New Roman	x	x	x	x
Times New Roman (Subset 1_30)	x	x	x	x
Times New Roman Bold	x	x		

Times New Roman Bold Italic	x	x		
Times New Roman Italic	x	x		
Trebuchet MS	x	x		
Trebuchet MS	x	x		
Trebuchet MS Bold	x	x		
Trebuchet MS Bold Italic	x	x		
Trebuchet MS Italic	x	x		
Verdana	x	x		
Verdana	x	x		
Verdana Bold	x	x		
Verdana Bold Italic	x	x		
Verdana Italic	x	x		
Webdings	x	x		
Wingding	x	x	x	x
INTERNATIONAL				
Input Method Manager (IMM)	x	x	x	x
Locale Services (Choose 1)	x	x	x	x
National Language Support (NLS)	x	x	x	x
English (US) National Language Support only	x	x		
Locale Specific Support	x	x		
Arabic	x	x		
Fonts	x	x		
Tahoma (subset 1_08)	x	x		
Tahoma Bold (subset 1_08)	x	x		
Arial (subset 1_08)	x	x		
Arial Bold (subset 1_08)	x	x		
Courier New (subset 1_08)	x	x		
Keyboard	x	x		
Arabic Keyboard (101)	x	x		
Chinese (Simplified)	x	x		
Agfa AC3 Font Compression	x	x		
Fonts	x	x		
SimSun & NSimSun (Choose 1)	x	x		
SimSun & NSimSun	x	x		
SimSun & NSimSun (Subset 2_20)	x	x		
SimSun & NSimSun (Subset 2_50)	x	x		
SimSun & NSimSun (Subset 2_60)	x	x		
SimSun & NSimSun (Subset 2_70)	x	x		
SimSun & NSimSun (Subset 2_80)	x	x		
SimSun & NSimSun (Subset 2_90)	x	x		
SC_Song	x	x		
GB18030 Data Converter	x	x		
Input Method Editor (Choose 1)	x	x		
MSPY 3.0 for Windows CE	x	x		
MSPY 3.0 for Windows CE Database (Choose 1)	x	x		

1.1 MB - Minimal Database	x	x		
1.3 MB - Compact Database	x	x		
1.7 MB - Standard Database	x	x		
Double Spelling (Shuang Pin) soft keyboard - Large	x	x		
Double Spelling (Shuang Pin) soft keyboard - Small	x	x		
Pocket IME	x	x		
Double Spelling (Shuang Pin) soft keyboard - Small	x	x		
Chinese (Traditional)	x	x		
Agfa AC3 Font Compression	x	x		
Fonts	x	x		
MingLiU & PMingLiU (Choose 1)	x	x		
MingLiU & PMingLiU	x	x		
MingLiU & PMingLiU (Subset 2_70)	x	x		
MingLiU & PMingLiU (Subset 2_80)	x	x		
MingLiU & PMingLiU (Subset 2_90)	x	x		
MS Ming	x	x		
Input Method Editor	x	x		
Pocket IME	x	x		
Input Methods	x	x		
Input by Radical (Chang Jei)	x	x		
Handwriting Recognizer Engine (HWX)		x		
MboxCHT HWX Sample UI		x		
Phonetic Input (Bopomofo)	x	x		
English (Worldwide)	x	x		
Input Methods	x	x		
Handwriting Recognizer Engine (HWX)		x		
English (U.S.)	x	x		
Input Methods	x	x		
Transcriber Handwriting Recognition Application		x		
French	x	x		
Input Methods	x	x		
Transcriber Handwriting Recognition Application		x		
German	x	x		
Input Methods	x	x		
Transcriber Handwriting Recognition Application		x		
Hebrew	x	x		
Fonts	x	x		
Tahoma (subset 1_08)	x	x		
Arial (subset 1_08)	x	x		
Tahoma Bold (subset 1_08)	x	x		
Arial Bold (subset 1_08)	x	x		
Courier New (subset 1_08)	x	x		
Keyboard	x	x		
Hebrew Keyboard	x	x		

Indic	x	x		
Hindi	x	x		
Fonts	x	x		
Mangal	x	x		
Keyboard	x	x		
Hindi Traditional Keyboard	x	x		
Marathi	x	x		
Fonts	x	x		
Mangal	x	x		
Keyboard	x	x		
Marathi Keyboard	x	x		
Punjabi	x	x		
Fonts	x	x		
Raavi	x	x		
Keyboard	x	x		
Punjabi Keyboard	x	x		
Telugu	x	x		
Fonts	x	x		
Gautami	x	x		
Keyboard	x	x		
Telugu Keyboard	x	x		
Gujarati	x	x		
Fonts	x	x		
Shruti	x	x		
Keyboard	x	x		
Gujarati Keyboard	x	x		
Kannada	x	x		
Fonts	x	x		
Tunga	x	x		
Keyboard	x	x		
Kannada Keyboard	x	x		
Tamil	x	x		
Fonts	x	x		
Latha	x	x		
Keyboard	x	x		
Tamil Keyboard	x	x		
Japanese	x	x		
Agfa AC3 Font Compression	x	x		
Fonts	x	x		
MS Gothic (Choose 1)	x	x		
MS Gothic & MS PGothic & MS UI Gothic	x	x		
MS Gothic & MS PGothic & MS UI Gothic (Subset 1_50)	x	x		
MS Gothic & MS PGothic & MS UI Gothic (Subset 1_60)	x	x		
MS Gothic & MS PGothic & MS UI Gothic (Subset 1_80)	x	x		

MS Gothic & MS PGothic & MS UI Gothic (Subset 1_90)	x	x		
MS Gothic & MS PGothic & MS UI Gothic (Subset 1_70)	x	x		
MS Gothic & MS PGothic (Subset 30)	x	x		
MS Gothic & MS PGothic (Subset 30_1_19)	x	x		
MS Mincho & MS PMincho	x	x		
Input Method Editor (Choose 1)	x	x		
IME 3.1	x	x		
IME 3.1 Database (Choose 1)	x	x		
Standard Database	x	x		
Compact Database	x	x		
Optional UI Components	x	x		
Dictionary Tool	x	x		
Properties Dialog Box	x	x		
Advanced Settings Dialog Box (Landscape mode only)	x	x		
System Tray Icon Manager	x	x		
Pocket IME (Choose Additional Databases)	x	x		
Name/Place Database	x	x		
Supplemental Database	x	x		
Test IME	x	x		
Input Methods	x	x		
All Characters List	x	x		
Handwriting Recognizer Engine (HWX)		x		
Character Auto Complete - HWX Sample UI		x		
Multibox HWX Sample UI		x		
Kana Soft Keyboard	x	x		
Romaji/English Soft Keyboard	x	x		
Search by Radical	x	x		
Search by Stroke	x	x		
Korean	x	x		
Agfa AC3 Font Compression	x	x		
Fonts	x	x		
Gulim (GL_CE)	x	x		
Gulim & GulimChe (Choose 1)	x	x		
Gulim & GulimChe (Subset 1_30)	x	x		
Gulim & GulimChe (Subset 1_40)	x	x		
Gulim & GulimChe (Subset 1_50)	x	x		
Gulim & GulimChe (Subset 1_60)	x	x		
Input Method Editor	x	x		
IME 97	x	x		
Input Methods	x	x		
Handwriting Recognizer Engine (HWX)		x		
MboxKOR HWX Sample UI		x		
Korean Soft Keyboard Sample	x	x		
Thai	x	x		

Fonts	x	x		
Tahoma (subset 1_08)	x	x		
Keyboard	x	x		
Thai Kedmanee Keyboard	x	x		
Multilingual User Interface (MUI)	x	x		
Unicode Script Processor for Complex Scripts	x	x		
Internet Client Services	x	x		x
Browser Application		x		x
Internet Explorer 6.0 for Windows CE - Standard Components		x		x
Internet Explorer 6.0 Sample Browser		x		x
TV-Style Navigation Components		x		
Pocket Internet Explorer		x		
Internet Explorer 6.0 for Windows CE Components				x
Internet Explorer Browser Control Host		x		x
Internet Explorer HTML/DHTML API		x		x
Internet Explorer HTML Application		x		x
Filter and Translation		x		x
Internet Explorer Plug-in Image Decoder API		x		x
Internet Explorer PNG Image Decoder		x		x
Internet Explorer Theme Library		x		x
Internet Explorer Multiple-Language Base API	x	x	x	x
Internet Explorer Multiple-Language Full API		x		x
Optional Charset/Encoding in registry		x		x
Internet Explorer RPC Support		x		x
Internet Explorer TV-Style Navigation		x		
Fixed-Width Layout		x		
Directional Tabbing		x		
Disable Vertical Scroll Bar and Events		x		
Customizable Font Range		x		
URL Moniker Services	x	x	x	x
Windows Internet Services	x	x	x	x
Passport SSI 1.4 Authentication	x	x	x	x
Platform for Privacy Preferences (P3P)	x	x	x	x
XML Data Islands	x	x	x	x
XML MIME Viewer	x	x	x	x
Pocket Internet Explorer HTML View (WEBVIEW)		x		
Internet Options Control Panel		x		x
Scripting	x	x	x	x
JScript 5.6	x	x	x	x
Script Authoring (Jscript)	x	x	x	x
Script Encode (Jscript)	x	x	x	x
VBScript 5.6	x	x	x	x
Script Authoring (VBScript)	x	x	x	x
Script Encode (VBScript)	x	x	x	x
MsgBox and InputBox support	x	x	x	x

GRAPHICS AND MULTIMEDIA TECHNOLOGIES				
Graphics	x	x		
Raster Fonts Support	x	x		
V1 Font Compatibility	x	x		
Alphablend API (GDI version)	x	x		
Gradient Fill Support	x	x	x	x
Multiple Monitor Support	x	x		
Imaging	x	x	x	x
Still Image Codec Support (Encode and Decode)	x	x	x	x
Still Image Decoders	x	x	x	x
PNG Decoder	x	x	x	x
BMP Decoder	x	x	x	x
GIF Decoder	x	x	x	x
ICO Decoder	x	x	x	x
JPG Decoder	x	x	x	x
Still Image Encoders	x	x	x	x
GIF Encoder	x	x	x	x
BMP Encoder	x	x	x	x
JPG Encoder	x	x	x	x
PNG Encoder	x	x	x	x
Direct3D Mobile	x	x	x	x
DirectDraw	x	x	x	x
Audio	x	x	x	x
Audio Compression Manager	x	x	x	x
GSM 6.10 Codec	x	x	x	x
MSFilter Codec	x	x	x	x
Waveform Audio	x	x	x	x
Media	x	x	x	x
Streaming Media Playback (requires WMP application)		x		x
WMA and MP3 Local Playback	x	x	x	x
WMA and MP3 Streaming (requires WMP application)		x		x
Digital Rights Management	x	x		
Digital Rights Management (DRM)	x	x		
DRM for Portable Devices	x	x		
DRM License Acquisition OCX	x	x		
DirectShow	x	x	x	x
DirectShow Core	x	x	x	x
DirectShow Display	x	x	x	x
DirectShow Error Messages	x	x	x	x
DMO Wrapper Filter	x	x	x	x
ACM Wrapper Filter	x	x	x	x
Media Formats	x	x	x	x
AVI Filter	x	x	x	x
MPEG-1 Parser/Splitter	x	x	x	x
Audio Codecs and Renderers	x	x	x	x

G.711 Audio Codec	x	x	x	x
GSM 6.10 Audio Codec	x	x	x	x
IMA ADPCM Audio Codec	x	x	x	x
MP3 Codec	x	x	x	x
MPEG-1 Layer 1 and 2 Audio Codec	x	x	x	x
MS ADPCM Audio Codec	x	x	x	x
Waveform Audio Renderer	x	x	x	x
WMA Codec	x	x	x	x
WMA Voice Codec	x	x	x	x
Wave/AIFF/au/snd File Parser	x	x	x	x
Video Codecs and Renderers	x	x	x	x
DirectShow Video Renderer	x	x	x	x
MPEG-1 Video Codec	x	x	x	x
MS RLE Video Codec	x	x	x	x
Overlay Mixer	x	x	x	x
Video/Image Compression Manager	x	x	x	x
WMV/MPEG-4 Video Codec	x	x	x	x
DVD-Video	x	x		
DVD-Video	x	x		
DVD-Video Samples	x	x		
Windows Media Player		x		x
Windows Media Player		x		x
Windows Media Player OCX		x		x
Windows Media Technologies	x	x		x
ASX v1 and M3U File Support	x	x		x
ASX v2 File Support	x	x		x
ASX v3 File Support	x	x		x
Windows Media Multicast and Multi-Bit Rate	x	x		x
NSC File Support	x	x		x
Windows Media Streaming from Local Storage	x	x		x
Windows Media Streaming over HTTP	x	x		x
Windows Media Streaming over MMS	x	x		x
SECURITY				
Authentication Services (SSPI)	x	x	x	x
NTLM	x	x	x	x
Kerberos	x	x	x	x
Schannel (SSL/TLS)	x	x	x	x
Cryptography Services (CryptoAPI 1.0) with High Encryption Provider	x	x	x	x
Certificates (CryptoAPI 2.0)	x	x	x	x
Cryptographic Messaging (PKCS#7)	x	x	x	x
Personal Information Exchange Standard (PKCS #12)	x	x	x	x
Diffie-Hellman/DSS Provider	x	x	x	x
Smart Card Encryption Provider	x	x		
Local Authentication Sub-System	x	x		
Password Local Authentication Plug-in	x	x		

Microsoft Certificate Enrollment Tool Sample	x	x		
Credential Manager	x	x		
SHELL AND USER INTERFACE				
Graphics, Windowing and Events	x	x	x	x
Minimal GWES Configuration	x	x	x	x
Minimal GDI Configuration	x	x	x	x
Minimal Input Configuration	x	x	x	x
Minimal Window Manager Configuration	x	x	x	x
Shell		x		
Graphical Shell (Choose 1)		x		
Standard Shell	x	x	x	x
Windows Thin Client Shell		x		
AYGShell API Set		x		x
Command Shell	x	x	x	x
Console Window	x	x	x	x
Command Processor	x	x	x	x
User Interface	x	x	x	x
Accessibility	x	x	x	x
Common Dialog Support	x	x	x	x
Controls Option B	x	x		
Control Panel Applets	x	x	x	x
Customizable UI	x	x	x	x
Windows XP-like Sample Skin	x	x	x	x
Menu Tool Tip	x	x	x	x
Mouse	x	x	x	x
Network User Interface	x	x	x	x
Overlapping Menus	x	x	x	x
Software Input Panel	x	x	x	x
Software-based Input Panel Driver	x	x	x	x
Software-based Input Panel (SIP) (Choose 1 or more)	x	x	x	x
SIP for Small Screens	x	x	x	x
SIP for Large Screens	x	x	x	x
Touch Screen (Stylus)	x	x	x	x
Quarter VGA Resources - Portrait Mode	x	x		
Common Controls	x	x	x	x
Animation Control	x	x	x	x
Common Control	x	x	x	x
Windows CE Error Reporting	x	x		
Error Report Generator	x	x		
Report Upload Client	x	x		
Report Upload Client User Interface	x	x		
Error Report Transfer Driver	x	x		
Error Reporting Control Panel	x	x		
VOICE OVER IP PHONE SERVICES				
Phone IME	x	x		

PC Authentication	x	x		
Telephony User Interface	x	x		
VoIP Application Interface Layer (VAIL)	x	x		
VAIL Database Store	x	x		
Phone Provisioner	x	x		
Reference Media Manager	x	x		
Real-time Communications (RTC) Client API	x	x		
SIREN/G.722.1 Codecs	x	x		

CHAPTER

5

Mechanical drawing

SPC-101C

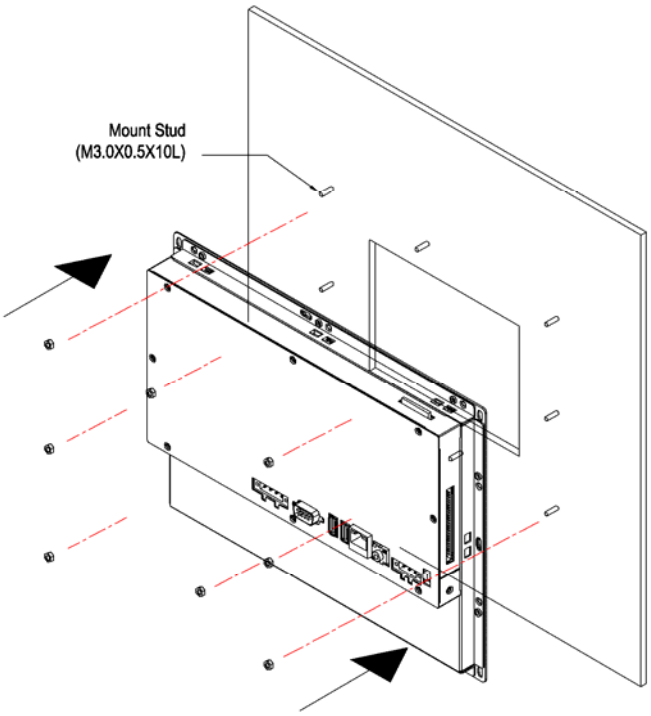

Rear View for Panel Mount (SPC-101C)

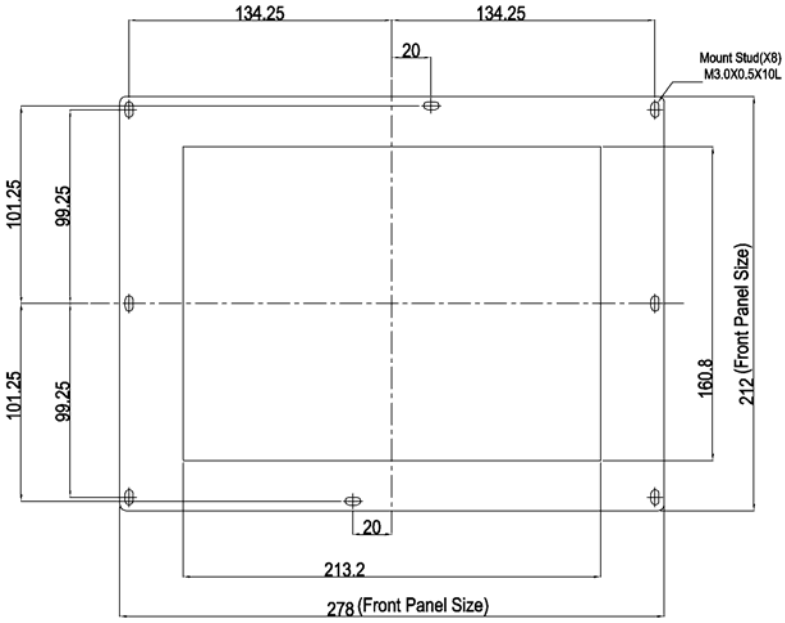

Front View for Panel Mount (SPC-101C)

Unit:mm

SPC-101A

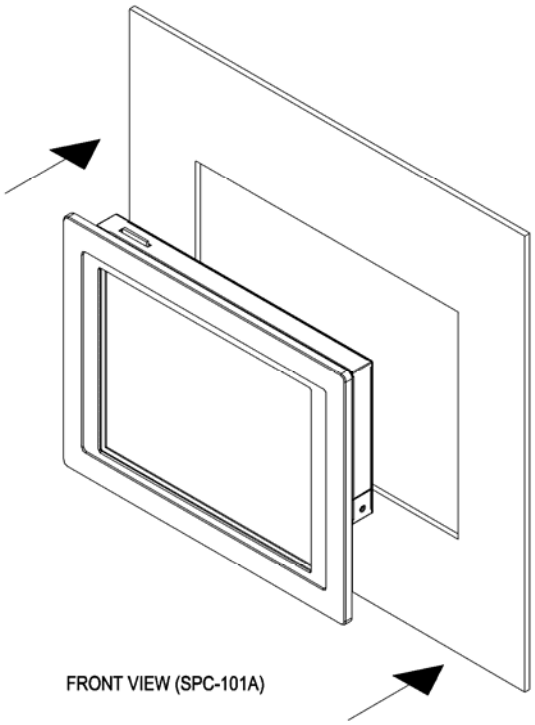

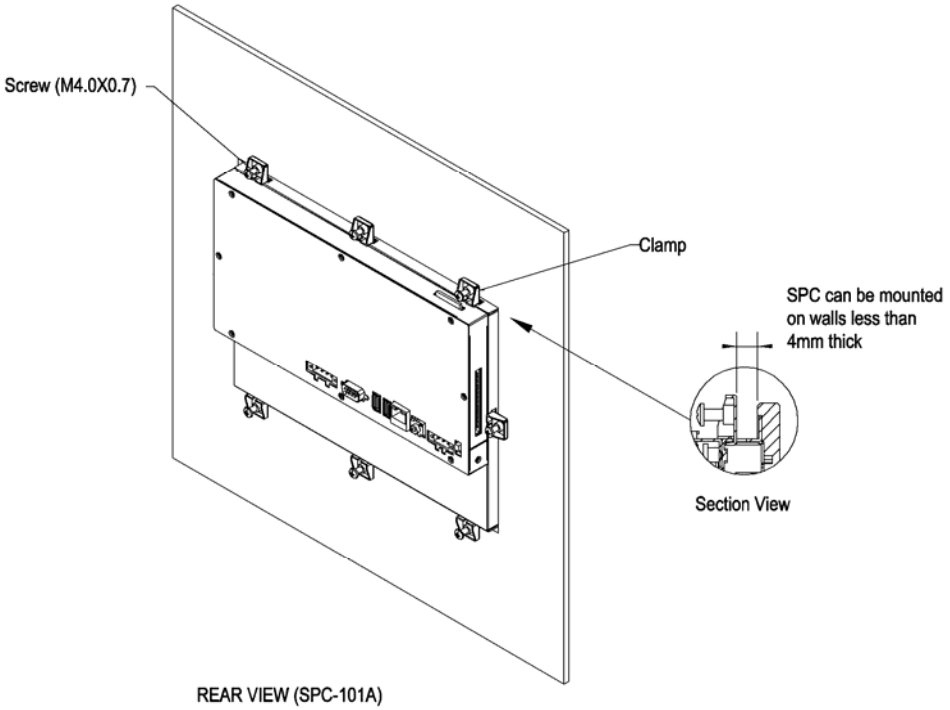

REAR VIEW (SPC-101A)

SPC-101A

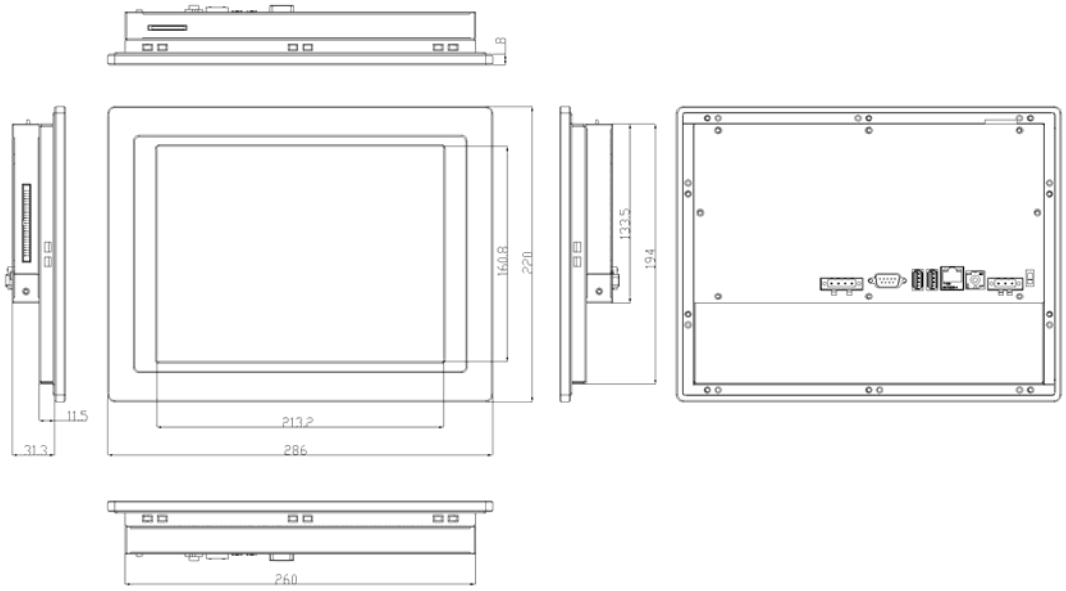

SPC-101C