PCM-3531 PCI Graphic card PC/104-plus Module Startup Manual

Packing List

Before you begin installing your card, please make sure that the following materials have been shipped:

- 1 PCM-3531
- 1 Start-up manual
- 1 Utility CD
- Optioanl Accessory
- DVI Cable p/n 1700000243

If any of these items are missing or damaged, contact your distributor or sales representative immediately.

Note 1: For detailed contents of the PCM-3531, please refer to the enclosed CD Disc or disk (in PDF format).
Note 2: Acrobat Reader is required to view any PDF file. Acrobat Reader can be downloaded at: www.adobe.com/products/acrobat/readstep2.html(Acrobat is a trademark of Adobe.)

Mechanical and Environmental

- **Dimensions (L x W):** 96 x 90 mm (3.8" x 3.5")
- **Weight:** 0.08kg
- **Operating Temperature:** 0 ~ 60°C(32~140°F)
- **Storage temperature:** -40 ~ 85°C(-40~185°F)
- **Operating Humidity:** 0%~90% relative humity, non-condensing
- **Power Supply Voltage:** 5V and 12V

Specifications

- **Chipset:** ATI RAGE Mobility M6 chipset
- **Video Memory:** 8MB on chip
- **VGA/LCD Function:** Support CRT display, 2 Channels 18/24-bit LVDS, TV-out, DVI interface
- **Dual display combination**: LVDS+CRT, LVDS+TV-out, LVDS+DVI, LVDS+CRT+TV, LVDS+CRT+DVI
- **External Power:** +12V for LCD inverter

Features

Supports 18/24/36/48 bit LVDS Panel up to 2048x1536 resolution

Support TV-Output (up to 1024x768)

Support 2 Channels 18/24-bit LVDS

Support Hardware MPEG-2 Decoder

Support Dual display function

Compatible with PC/104-plus and standard PCI card PCI2.1

For more information on this and other Advantech products, please visit our website at:

http://www.advantech.com

http://www.advantech.com/eplatform

For technical support and service, please visit our support website at:

http://www.advantech.com/support

This manual is for the PCM-3531 series Rev. A2.

Part No. 2006353101 2nd Edition
Aug. 2006

Jumpers & Connectors

Connectors on the board link it to external devices, such as hard disk drives, a keyboard or expansion bus connectors. In addition, the board has a number of jumpers that allow you to configure your system to suit your application.

The table below lists the function of each of the jumpers and connectors.

Connectors	
Label	**Function**
CN1	CRT Connector
CN2	PC/104+ Connector
CN3	DVI Connector
CN4	TV-out
CN5	LVDS Connector
CN6	Backlight Connector
SW1	PCI ID selection
SW2	LVDS panel pixel selection

SW1	PCI ID selection				
1/2	IDSEL	CLK	#REQ	#GNT	#INT
ON/ON	AD20	CLK0	#REQ0	#GNT0	#PINTA
ON/OFF	AD21	CLK1	#REQ1	#GNT1	#PINTB
OFF/ON	AD22	CLK2	#REQ2	#GNT2	#PINTC
OFF/OFF	AD23	CLK3	#REQ2	#GNT2	#PINTD

SW2 LVDS panel pixel selection		
SW2[3:1](LTGIO[2 : 0])	Resolution	
0 0 0		Disable LVDS
0 0 1	800 * 600	1ch 18bit
0 1 0	1024 * 768	1ch 18bit
0 1 1	800 * 600	1ch 24bit
1 0 0	1024 * 768	1ch 24bit
1 0 1	1280 * 1024	1ch 24bit
1 1 0	1280 * 1024	2ch 24bit

Board Layout

Locating connectors

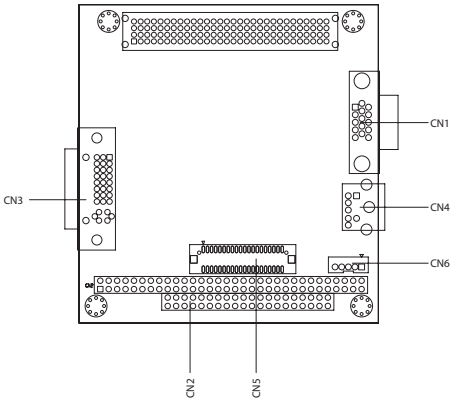

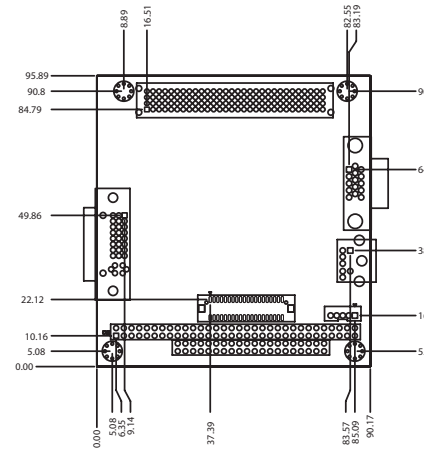

Mechanical Drawing (component side)

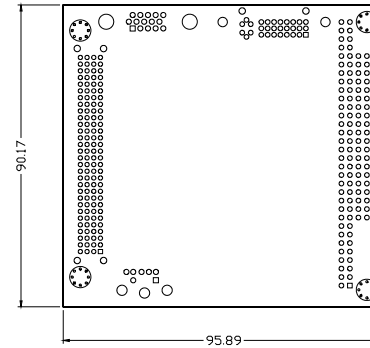

Mechanical Drawing (solder side)