3A68-0C

1).將內軌取出 Release and detatch the inner member from the slide

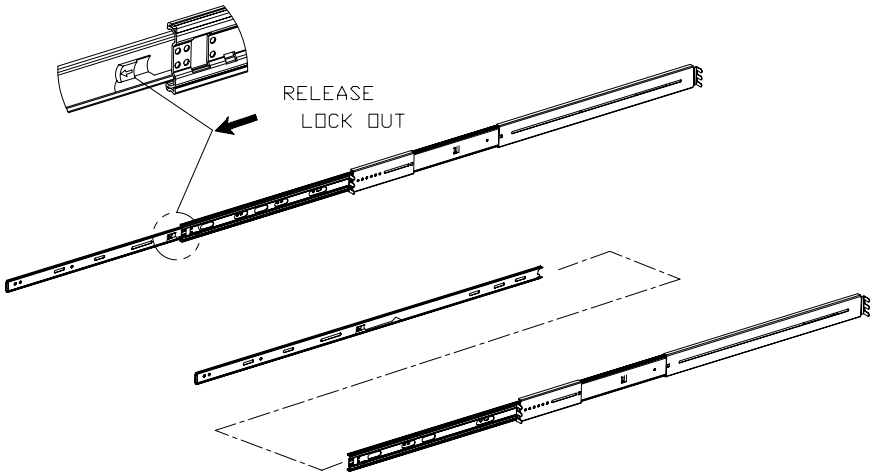

2).將機台鎖上內軌 Attach the inner member to the unit

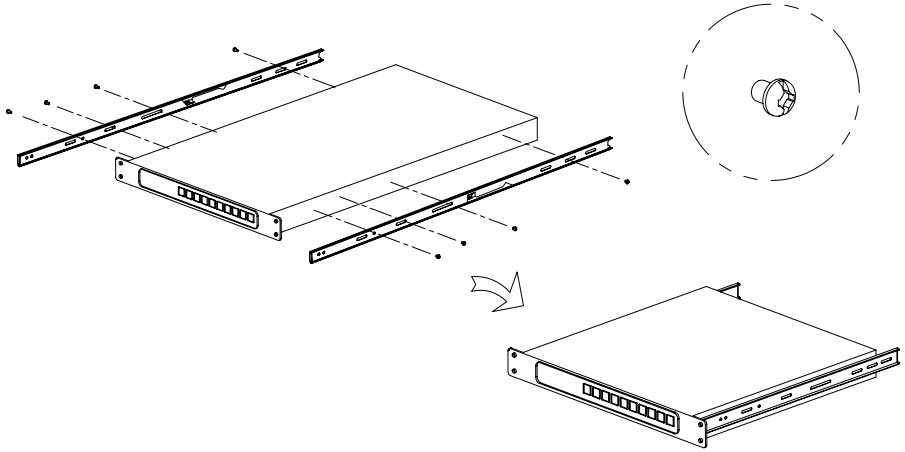

3).將外軌+托架鎖入機架 Fix the outer member/bracket assembly to the frame

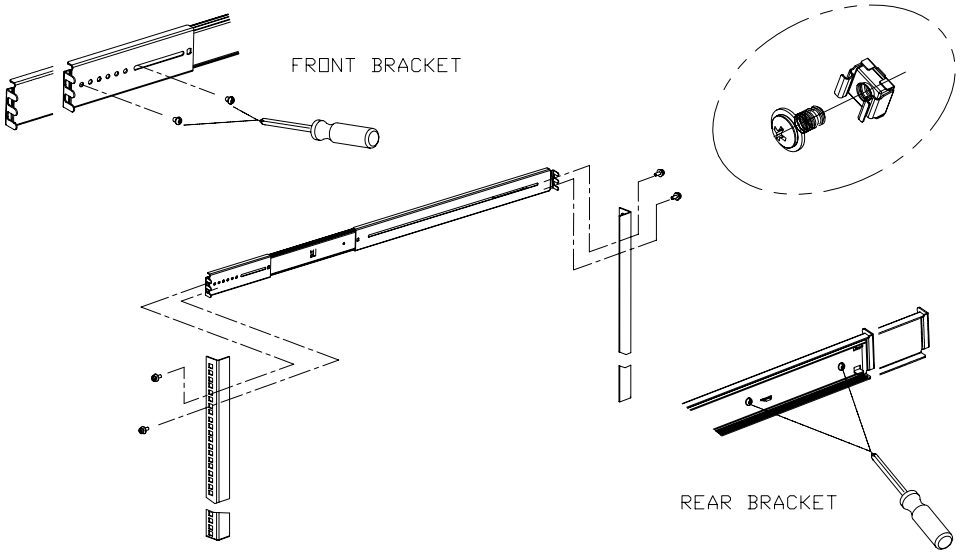

4).裝入機架 Insert the unit to complete the installation

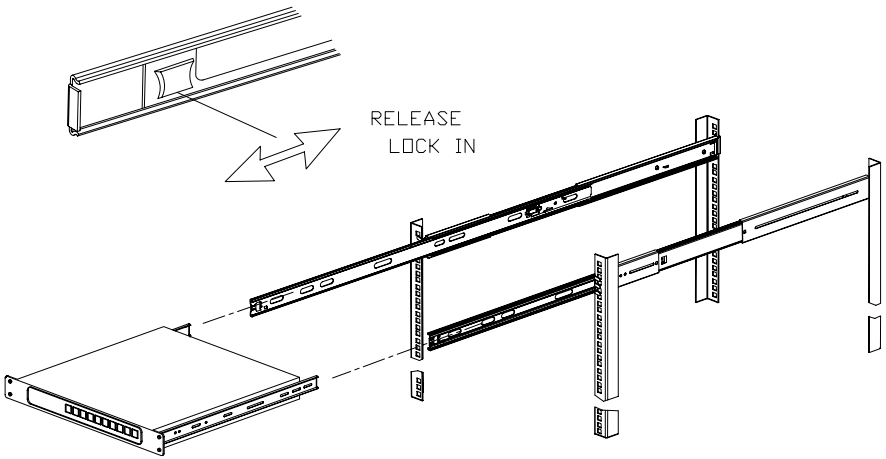

GENERAL TOLERANCE	
TOLERANCE	±0.3

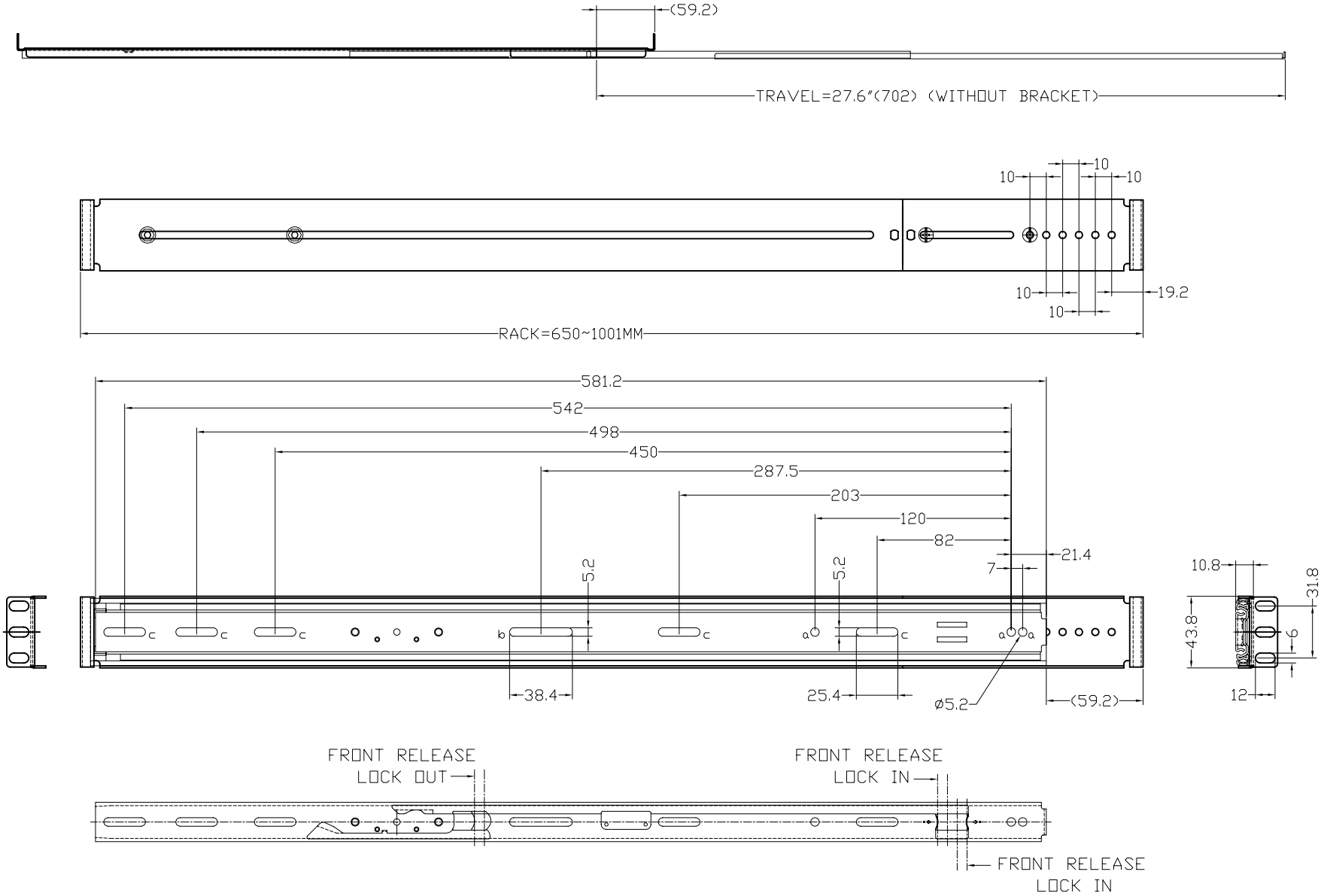

Load capacity up to 100bs(45kg)/pair

PART NAME	3A68-584CPZZ0CE	DESIGN	CKC	CHECK		UNIT	mm	DWG NO.		MATERIAL					3			
		DRAWING	JAMES TSENG	DATE	2004.12.08	SCALE		DIE NO.		HARDNESS					2			
KING SLIDE INT'L CO., LTD.										FINISH					1			
										REVERSION		PART NUMBER	CUSTOMER ITEM NO	COLOR		CHANGE REVISION	CHANGER	DATE