User Manual

ES-2000 Series

Open Frame Monitor & Rugged Panel Mount Monitor

Trusted ePlatform Services

ADVANTECH

Copyright

Acknowledgements

Intel and Pentium are trademarks of Intel Corporation.

Microsoft Windows and MS-DOS are registered trademarks of Microsoft Corp.

All other product names or trademarks are properties of their respective owners.

Product Warranty (1 year)

Advantech warrants to you, the original purchaser, that each of its products will be free from defects in materials and workmanship for one year from the date of purchase.

This warranty does not apply to any products which have been repaired or altered by persons other than repair personnel authorized by Advantech, or which have been subject to misuse, abuse, accident or improper installation. Advantech assumes no liability under the terms of this warranty as a consequence of such events.

Because of Advantech's high quality-control standards and rigorous testing, most of our customers never need to use our repair service. If an Advantech product is defective, it will be repaired or replaced at no charge during the warranty period. For out-of-warranty repairs, you will be billed according to the cost of replacement materials, service time and freight. Please consult your dealer for more details.

If you think you have a defective product, follow these steps:

1. Collect all the information about the problem encountered. (For example, CPU speed, Advantech products used, other hardware and software used, etc.) Note anything abnormal and list any onscreen messages you get when the problem occurs.
2. Call your dealer and describe the problem. Please have your manual, product, and any helpful information readily available.
3. If your product is diagnosed as defective, obtain an RMA (return merchandize authorization) number from your dealer. This allows us to process your return more quickly.
4. Carefully pack the defective product, a fully-completed Repair and Replacement Order Card and a photocopy proof of purchase date (such as your sales receipt) in a shippable container. A product returned without proof of the purchase date is not eligible for warranty service.
5. Write the RMA number visibly on the outside of the package and ship it prepaid to your dealer.

Part No. 2008211000 Edition 1

Printed in Taiwan November 2007

Declaration of Conformity

CE

This product has passed the CE test for environmental specifications when shielded cables are used for external wiring. We recommend the use of shielded cables. This kind of cable is available from Advantech. Please contact your local supplier for ordering information.

CE

This product has passed the CE test for environmental specifications. Test conditions for passing included the equipment being operated within an industrial enclosure. In order to protect the product from being damaged by ESD (Electrostatic Discharge) and EMI leakage, we strongly recommend the use of CE-compliant industrial enclosure products.

FCC Class A

Note: This equipment has been tested and found to comply with the limits for a Class A digital device, pursuant to part 15 of the FCC Rules. These limits are designed to provide reasonable protection against harmful interference when the equipment is operated in a commercial environment. This equipment generates, uses, and can radiate radio frequency energy and, if not installed and used in accordance with the instruction manual, may cause harmful interference to radio communications. Operation of this equipment in a residential area is likely to cause harmful interference in which case the user will be required to correct the interference at his own expense.

FCC Class B

Note: This equipment has been tested and found to comply with the limits for a Class B digital device, pursuant to part 15 of the FCC Rules. These limits are designed to provide reasonable protection against harmful interference in a residential installation. This equipment generates, uses and can radiate radio frequency energy and, if not installed and used in accordance with the instructions, may cause harmful interference to radio communications. However, there is no guarantee that interference will not occur in a particular installation. If this equipment does cause harmful interference to radio or television reception, which can be determined by turning the equipment off and on, the user is encouraged to try to correct the interference by one or more of the following measures:

- Reorient or relocate the receiving antenna.
- Increase the separation between the equipment and receiver.
- Connect the equipment into an outlet on a circuit different from that to which the receiver is connected.
- Consult the dealer or an experienced radio/TV technician for help.

FM

This equipment has passed the FM certification. According to the National Fire Protection Association, work sites are classified into different classes, divisions and groups, based on hazard considerations. This equipment is compliant with the specifications of Class I, Division 2, Groups A, B, C and D indoor hazards.

Technical Support and Assistance

1. Visit the Advantech web site at **www.advantech.com/support** where you can find the latest information about the product.
2. Contact your distributor, sales representative, or Advantech's customer service center for technical support if you need additional assistance. Please have the following information ready before you call:
   - Product name and serial number
   - Description of your peripheral attachments
   - Description of your software (operating system, version, application software, etc.)
   - A complete description of the problem
   - The exact wording of any error messages

Warnings, Cautions and Notes

Warning! *Warnings indicate conditions, which if not observed, can cause personal injury!*

Caution! *Cautions are included to help you avoid damaging hardware or losing data. e.g.*

There is a danger of a new battery exploding if it is incorrectly installed. Do not attempt to recharge, force open, or heat the battery. Replace the battery only with the same or equivalent type recommended by the manufacturer. Discard used batteries according to the manufacturer's instructions.

Note! *Notes provide optional additional information.*

Document Feedback

To assist us in making improvements to this manual, we would welcome comments and constructive criticism. Please send all such - in writing to: support@advantech.com

Packing List

Before setting up the system, check that the items listed below are included and in good condition. If any item does not accord with the table, please contact your dealer immediately.

- Item XXXXXXXX
- Box XXXXXXXXX

Safety Instructions

1. Disconnect this equipment from AC outlet before cleaning. Do not use liquid or spray detergents for cleaning.
2. For pluggable equipment, the power outlet shall be installed near the equipment and shall be easily accessible.
3. To prevent the risk of fire or shock hazards, do not expose this product to rain or moisture.
4. Please do not open or disassemble the products as this may cause electric shock.
5. Put this equipment on a reliable surface during installation. Dropping it or letting it fall could cause damage.
6. Do not leave this equipment in an environment unconditioned where the storage temperature under -20 C (-4º F) or above 60º C (140º F), it may damage the equipment.
7. The openings on the enclosure are for air convection hence protects the equipment from overheating. DO NOT COVER THE OPENINGS.
8. Make sure the voltage of the power source is correct before connecting the equipment to the power outlet.
9. Place the power cord such a way that people can not step on it. Do not place anything over the power cord. The voltage and current rating of the cord should be greater than the voltage and current rating marked on the product.
10. All cautions and warnings on the equipment should be noted.
11. If the equipment is not used for long time, disconnect it from the power source to avoid being damaged by transient over-voltage.
12. Never pour any liquid into ventilation openings. This could cause fire or electrical shock.
13. Never open the equipment. For safety reasons, the equipment should be opened only by qualified service personnel.
14. If any of the following situations arises, get the equipment checked by service personnel:
    - The power cord or plug is damaged.
    - Liquid has penetrated into the equipment.
    - The equipment has been exposed to moisture.
    - The equipment does not work well, or you cannot get it to work according to the user's manual.
    - The equipment has been dropped and damaged.
    - The equipment has obvious signs of breakage.
    - The equipment exhibits a distinct change in performance.
15. This device complies with Part 15 of the FCC rules. Operation is subject to the following two conditions:
    - This device may not cause harmful interference, and
    - This device must accept any interference received, including interference that may cause undesired operation.

Caution!

1. *Always completely disconnect the power cord from the chassis whenever working with hardware. Do not make connections while power is on. Sensitive electronic components can be damaged by sudden power surges.*
2. *Any unverified component may cause unexpected damage. To ensure correct installation, please always use components (ex. screws) provided with the accessory box.*

Safety Precaution - Static Electricity

Follow these simple precautions to protect yourself from harm and the products from damage.

- To avoid electrical shock, always disconnect the power from your PC chassis before you work on it. Don't touch any components on the CPU card or other cards while the PC is on.
- Disconnect power before making any configuration changes. The sudden rush of power as you connect a jumper or install a card may damage sensitive electronic components.

Contents

Chapter 3 System Set Up 23

Appendix A Troubleshooting 43

Chapter 1

Introduction

- ES-2100 & ES-2200 series
- Series features
- Self-service applications
- Series naming rule
- Series anatomy

1.1 ES-2000 Series Introduction

The Advantech ES-2000 series is a new type of Embedded Open Frame and Rugged Panel Mount Monitor, designed to meet the needs of customers who want quick and easy integrations for their solutions with Advantech Embedded Box Computers like ARK, DVS and DSA. Advantech offers two subcategories of the ES-2000 series: ES-2100 series (open frame display) and ES-2200 series (rugged panel mount display).

1.2 ES-2000 Series Features

- Full range of LCD size options: standard from 6.5" to 19"
- can be integrated with difference type of touch screen and tempered glass. E.g. Resistive, Capacitive, SAW and Infrared Vandal Proof
- Flexible & customizable face plates for easy re-engineering
- Versatile interface options: LVDS & VGA (DVI and S-Video support by project)
- Long time industrial components support
- Fully integrated with all Advantech Box computers and Embedded single boards and Industrial motherboards.
- Versatile sunlight readable and ultra high brightness options
- Wide operating temperature LCD options
- Industrial grade rugged aluminum front bezel design for ES-2200 series.

1.3 Application Scenarios: Self Services Applications

- KIOSK / POI machine
- Transportation machine
- Ticketing machine
- Financial ATM
- Entertainment / Gaming / Slot machine
- HMI (Human-Machine Interface) equipment controller monitor
- Public communication machine
- Public advertisement machine

1.4 ES-2000 Series Naming Rule & Anatomy

1.4.1 Naming rule

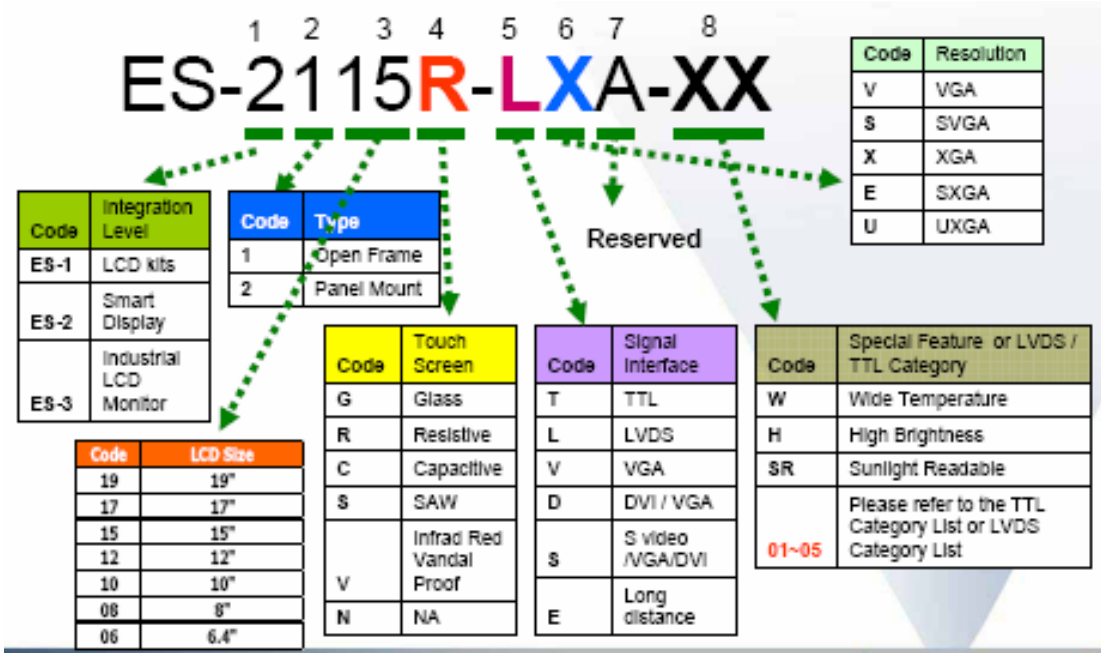

Code	Integration Level
ES-1	LCD kits
ES-2	Smart Display
ES-3	Industrial LCD Monitor

Code	Type
1	Open Frame
2	Panel Mount

Code	Resolution
V	VGA
S	SVGA
X	XGA
E	SXGA
U	UXGA

Code	LCD Size
19	19"
17	17"
15	15"
12	12"
10	10"
08	8"
06	6.4"

Code	Touch Screen
G	Glass
R	Resistive
C	Capacitive
S	SAW
V	Infrad Red Vandal Proof
N	NA

Code	Signal Interface
T	TTL
L	LVDS
V	VGA
D	DVI / VGA
S	S video /VGA/DVI
E	Long distance

Code	Special Feature or LVDS / TTL Category
W	Wide Temperature
H	High Brightness
SR	Sunlight Readable
01~05	Please refer to the TTL Category List or LVDS Category List

1.4.2 ES-2000 series anatomy

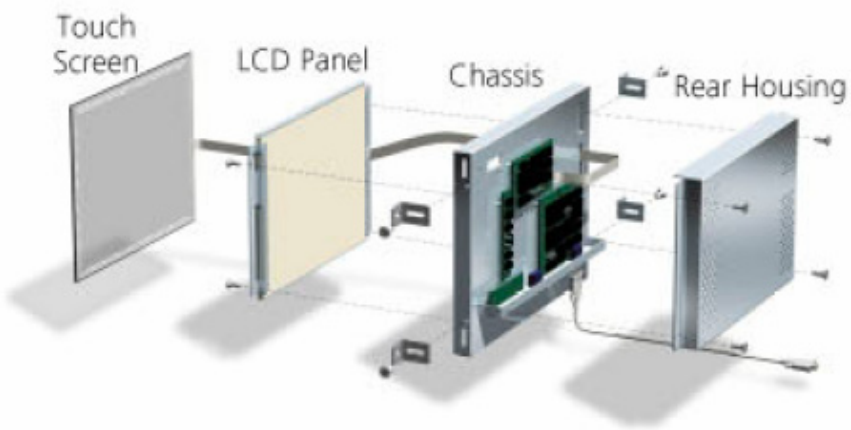

Figure 1.1 ES-2100 Open Frame

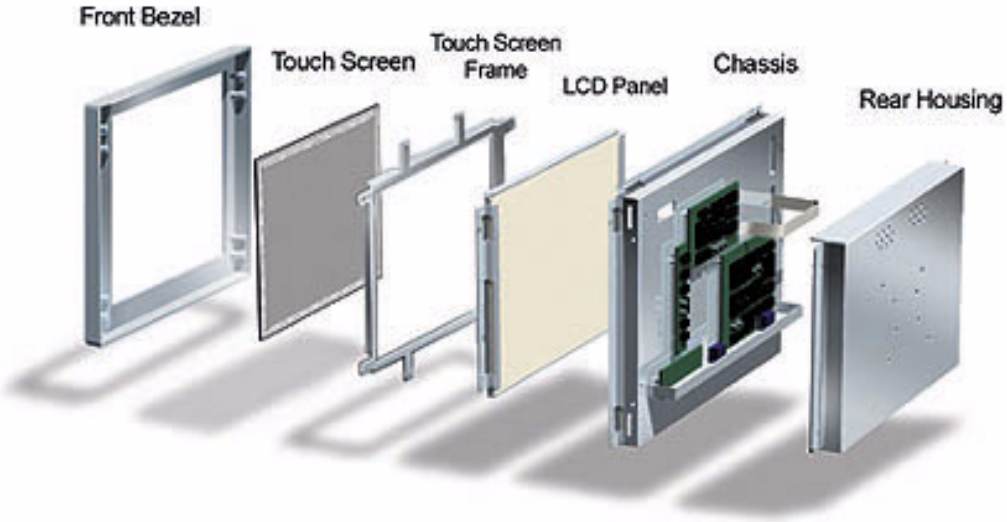

Figure 1.2 ES-2200 Rugged Panel Mount Monitor

Chapter 2

Specifications

- Detailed specifications
- Dimensions
- Accessory packing

2.1 Specifications

The ES-2000Series offers the following features and meets precise specifications. Unless otherwise noted, all the information listed below are subject to change without prior notification

- **I/O Ports**: either DB-15 pin (VGA) or DB-26 pin (LVDS)
  - a.) 15-pin D-sub (VGA), DC power input, RS232 port & USB port for touch, Power switch and OSD keys (Auto-tune, menu, decrease, increase).
    OSD control ' Keys: Auto-tune, menu, decrease and increase. Functions: Brightness, Contrast, Clock, Phase, Horizontal Position, vertical Position and Sharpness.
  - b.) DB-26 pin (LVDS), DC power input, dimming control Knob, panel on/off control button, RS232 port & USB port for touch.
- **Display Input Signal**: Analog RGB, 0.7 VP-P / 75 Ohm. Optional : LVDS (DB-26pin)
- **Power Input**: 12Vdc@4.16A.
- **External Power Adapter**: Max Output 50W(for 6.5"~17") & 60W(for 19"), AC input voltage 100 ~ 240V, UL/CE/CCC/TUV/CB Safety
- **Humidity**: 5 ~ 95%@40, non-condensing
- **Shock**: 10G peak acceleration (11 ms duration)
- **EMC Approved**: CE, FCC

2.2 Detailed Specifications

Table 2.1: ES-2106 / ES-2206		
Display		
Feature	**Standard**	**Sunlight Readable**
Size	6.5”	6.5”
Resolution (pixels)	640 x 480 VGA	640 x 480 VGA
Number of Colors	16.2M	16.2M
Viewing Angle (L/R/U/D)	70° / 70° / 60° / 60°	70° / 70° / 60° / 60°
Brightness (nit)	500	600
Contrast Ratio	600 :1	600 :1
Response Time (ms)	25	25
Lamp of Life (hrs)	50,000	50,000
Long-term support	Yes	Yes
Anti-reflection	N/A	V

Table 2.2: ES-2106 / ES-2206				
Touchscreen				
Type	**Analog Resistive**	**Capacitive**	**SAW**	**Infrared**
Thickness	1.87mm	3.18mm	N/A	N/A
Resolution	continuous	1024 x 1024	N/A	N/A
Light Transmission	over 80%	85%	N/A	N/A
Controller Interface	RS232/USB	RS-232	N/A	N/A
Power Consumption	+5V @ 20mA	+5V @ 100mA	N/A	N/A
Touch Lifetime	36 million hrs	225 million hrs	N/A	N/A
Driver OS Support	DOS, Linux, Mac, Windows 95/98/NT/ME/CE/2000/XP			

Table 2.3: ES-2108 / ES-2208		
Display		
Feature	**Standard**	**Sunlight Readable**
Size	8.4”	8.4”
Resolution (pixels)	800 x 600 SVGA	800 x 600 SVGA
Number of Colors	262K	262K
Viewing Angle (L/R/U/D)	60° / 60° / 60° / 40°	70° / 70° / 60° / 60°
Brightness (nit)	450	450
Contrast Ratio	500 :1	500 :1
Response Time (ms)	35	35
Lamp of Life (hrs)	50,000	50,000
Long-term support	Yes	Yes
Anti-reflection	N/A	Yes

Table 2.4: ES-2108 / ES-2208				
Touchscreen				
Type	**Analog Resistive**	**Capacitive**	**SAW**	**Infrared**
Thickness	2.67mm	3.0mm	3.0mm	N/A
Resolution	4096 x 4096	1024 x 1024	4096 x 4096	N/A
Light Transmission	80%	85%	92%	N/A
Controller Interface	RS-232/USB	RS-232	RS-232/USB	N/A
Power Consumption	+5V @ 200mA	+5V @ 100mA	+5V @ 75mA	N/A
Touch Lifetime	35 million hrs	225 million hrs	50 million hrs	N/A
Driver OS Support	DOS, Linux, Mac, Windows 95/98/NT/ME/CE/2000/XP			

Table 2.5: ES-2110 / ES-2210		
Display		
Feature	**Standard**	**Sunlight Readable**
Size	10.4”	10.4”
Resolution (pixels)	800 x 600 SVGA	800 x 600 SVGA
Number of Colors	262K	262K
Viewing Angle (L/R/U/D)	60° / 60° / 35° / 65°	60° / 60° / 35° / 65°
Brightness (nit)	230 / 400	600
Contrast Ratio	500 :1	500 :1
Response Time (ms)	35	25
Lamp of Life (hrs)	20,000 / 50,000	50,000
Long-term support	Yes	Yes
Anti-reflection	N/A	Yes

Table 2.6: ES-2110 / ES-2210				
Touchscreen				
Type	**Analog Resistive**	**Capacitive**	**SAW**	**Infrared**
Thickness	2.67mm	3.18mm	3.0mm	3.0mm
Resolution	4096 x 4096	1024 x 1024	4096 x 4096	4096 x 4096
Light Transmission	80%	85%	92%	92%
Controller Interface	RS-232/USB	RS-232	RS-232/USB	RS-232/USB
Power Consumption	+5V @ 200mA	+5V @ 100mA	+5V @ 75mA	+5V @ 150mA
Touch Lifetime	35 million hrs	225 million hrs	50 million hrs	MTBF 100,000 hrs
Driver OS Support	DOS, Linux, Mac, Windows 95/98/NT/ME/CE/2000/XP			

Table 2.7: ES-2112 / ES-2212		
Display		
Feature	**Standard**	**Sunlight Readable**
Size	12.1”	12.1”
Resolution (pixels)	800 x 600 SVGA/ 1024 x 768 XGA	800 x 600 SVGA
Number of Colors	262K	262K
Viewing Angle (L/R/U/D)	70° / 70° / 50° / 60°; 65° / 65° / 75° / 45°	70° / 70° / 50° / 60°
Brightness (nit)	400 / 320	400
Contrast Ratio	500 :1 / 550 :1	500 :1
Response Time (ms)	35 / 6	35
Lamp Life (hrs)	50,000	50,000
Long-term support	Yes	Yes
Anti-reflection	N/A	Yes

Table 2.8: ES-2112 / ES-2212				
Touchscreen				
Type	**Analog Resistive**	**Capacitive**	**SAW**	**Infrared**
Thickness	2.67mm	3.18mm	2.6mm	3.0mm
Resolution	4096 x 4096	1024 x 1024	4096 x 4096	4096 x 4096
Light Transmission	80%	85%	92%	92%
Controller Interface	RS-232/USB	RS-232	RS-232/USB	RS-232/USB
Power Consumption	+5V @ 200mA	+5V @ 100mA	+5V @ 75mA	+5V @ 150mA
Touch Lifetime	35 million hrs	225 million hrs	50 million hrs	MTBF 100,000 hrs
Driver OS Support	DOS, Linux, Mac, Windows 95/98/NT/ME/CE/2000/XP			

Table 2.9: ES-2115 / ES-2215		
Display		
Feature	**Standard**	**Sunlight Readable**
Size	15”	15”
Resolution (pixels)	1024 x 768 XGA	1024 x 768 XGA
Number of Colors	262K	262K
Viewing Angle (L/R/U/D)	60° / 60° / 40° / 60°	70° / 70° / 70° / 50°
Brightness (nit)	350	550
Contrast Ratio	500 :1	500 :1
Response Time (ms)	12	12
Lamp Life (hrs)	50,000	50,000
Long-term support	Yes	Yes
Anti-reflection	N/A	Yes

Table 2.10: ES-2115 / ES-2215				
Touchscreen				
Type	**Analog Resistive**	**Capacitive**	**SAW**	**Infrared**
Thickness	3.48mm	3.18mm	2.7mm	3.0mm
Resolution	4096 x 4096	1024 x 1024	4096 x 4096	4096 x 4096
Light Transmission	80%	85%	92%	92%
Controller Interface	RS-232/USB	RS-232	RS-232/USB	RS-232/USB
Power Consumption	+5V @ 200mA	+5V @ 100mA	+5V @ 75mA	+5V @ 150mA
Touch Lifetime	35 million hrs	225 million hrs	50 million hrs	MTBF 100,000 hrs
Driver OS Support	DOS, Linux, Mac, Windows 95/98/NT/ME/CE/2000/XP			

Table 2.11: ES-2117 / ES-2217		
Display		
Feature	**Standard**	**Sunlight Readable**
Size	17”	17”
Resolution (pixels)	1280 x 1024 SXGA	1280 x 1024 SXGA
Number of Colors	16.2M	16.2M
Viewing Angle (L/R/U/D)	70° / 70° / 70° / 60°	70° / 70° / 70° / 60°
Brightness (nit)	300	450
Contrast Ratio	500 :1	500 :1
Response Time (ms)	8	8
Lamp Life (hrs)	50,000	50,000
Long-term support	Yes	Yes
Anti-reflection	N/A	Yes

Table 2.12: ES-2117 / ES-2217				
Touchscreen				
Type	**Analog Resistive**	**Capacitive**	**SAW**	**Infrared**
Thickness	3.48mm	3.18mm	2.7mm	3.0mm
Resolution	4096 x 4096	1024 x 1024	4096 x 4096	4096 x 4096
Light Transmission	80%	85%	92%	92%
Controller Interface	RS-232/USB	RS-232	RS-232/USB	RS-232/USB
Power Consumption	+5V @ 200mA	+5V @ 100mA	+5V @ 75mA	+5V @ 150mA
Touch Lifetime	35 million hrs	225 million hrs	50 million hrs	MTBF 100,000 hrs
Driver OS Support	DOS, Linux, Mac, Windows 95/98/NT/ME/CE/2000/XP			

Table 2.13: ES-2119 / ES-2219		
Display		
Feature	**Standard**	**Sunlight Readable**
Size	19”	19”
Resolution (pixels)	1280 x 1024 SXGA	1280 x 1024 SXGA
Number of Colors	16.7M	16.7M
Viewing Angle (L/R/U/D)	89° / 89° / 89° / 89°	89° / 89° / 89° / 89°
Brightness (nit)	300	550
Contrast Ratio	500 :1	500 :1
Response Time (ms)	8	8
Lamp Life (hrs)	50,000	50,000
Long-term support	Yes	Yes
Anti-reflection	N/A	Yes

Table 2.14: ES-2119 / ES-2219				
Touchscreen				
Type	**Analog Resistive**	**Capacitive**	**SAW**	**Infrared**
Thickness	3.48mm	3.18mm	2.7mm	3.0mm
Resolution	4096 x 4096	1024 x 1024	4096 x 4096	4096 x 4096
Light Transmission	80%	85%	92%	92%
Controller Interface	RS-232/USB	RS-232	RS-232/USB	RS-232/USB
Power Consumption	+5V @ 200mA	+5V @ 100mA	+5V @ 75mA	+5V @ 150mA
Touch Lifetime	35 million hrs	225 million hrs	50 million hrs	MTBF 100,000 hrs
Driver OS Support	DOS, Linux, Mac, Windows 95/98/NT/ME/CE/2000/XP			

2.3 Dimensions

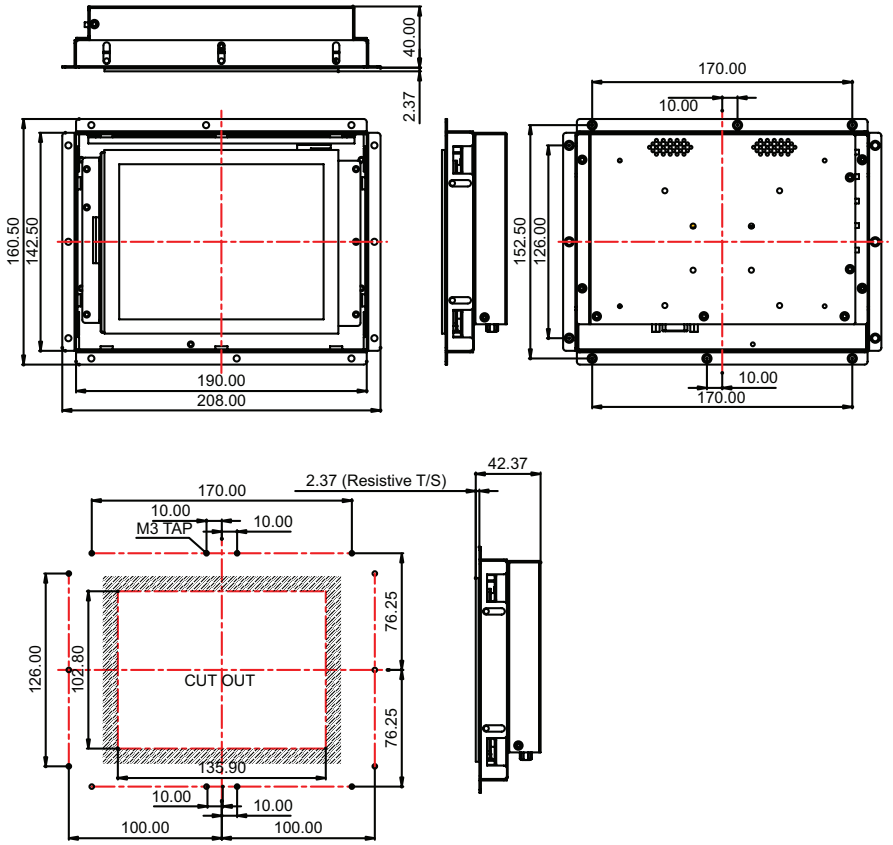

Figure 2.1 ES-2106 Dimensions

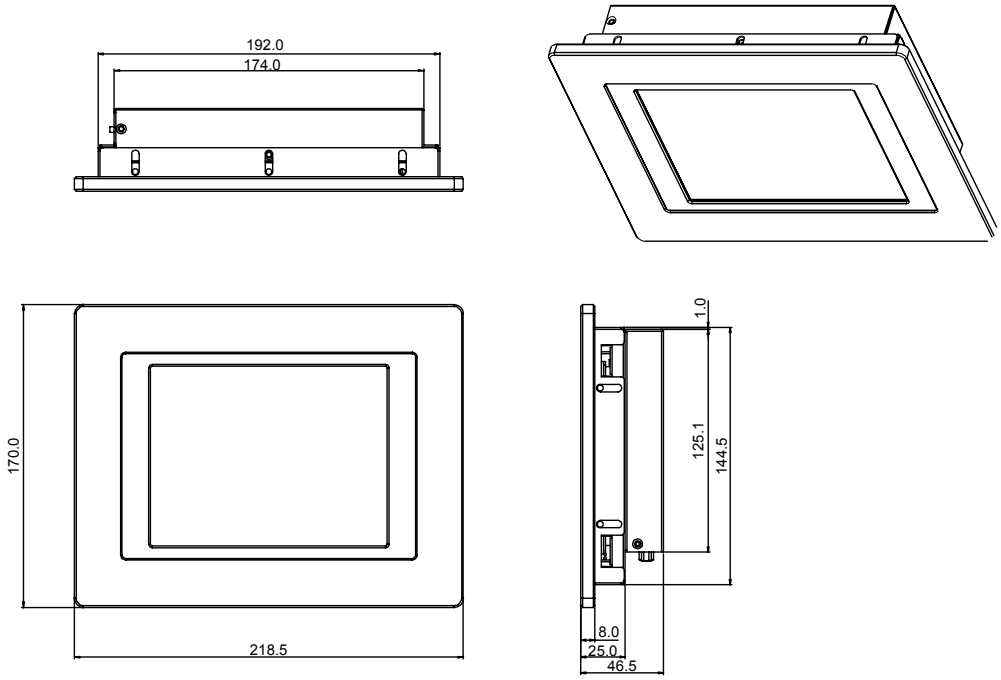

Figure 2.2 ES-2206 Dimensions

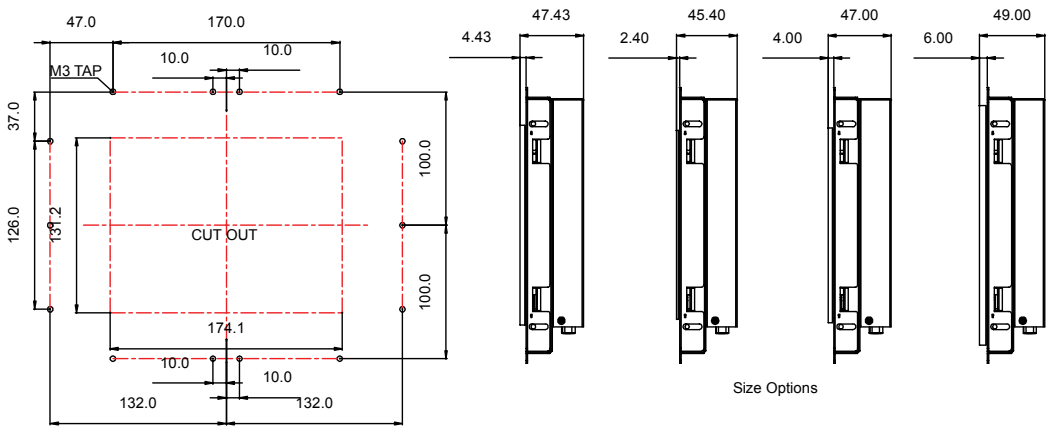

Figure 2.3 ES-2108 Dimensions

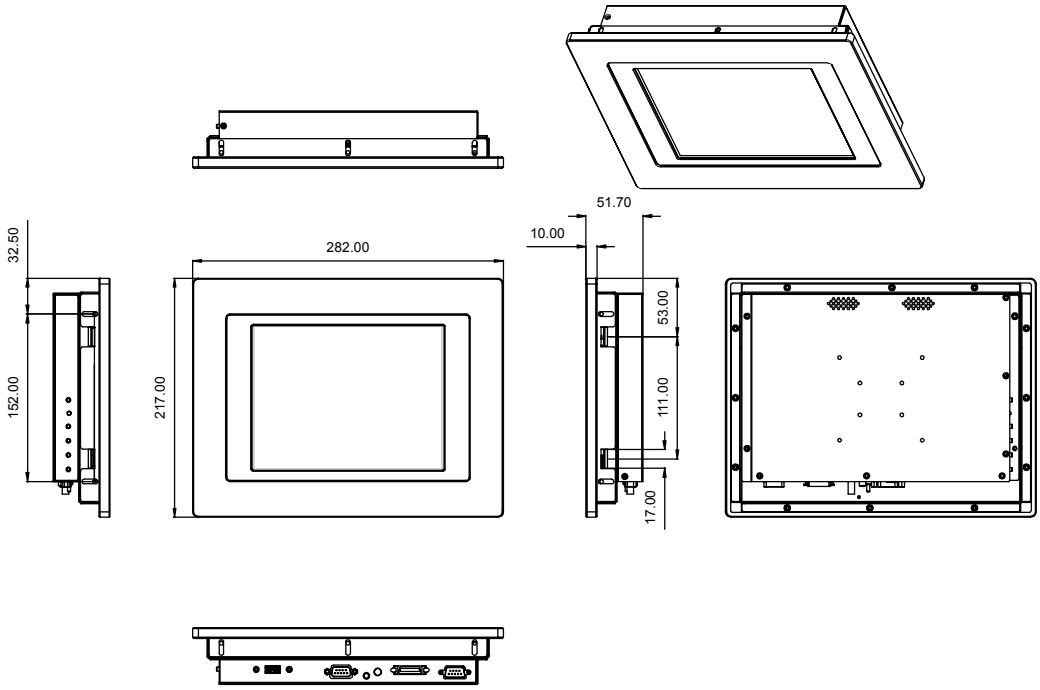

Figure 2.4 ES-2208 Dimensions

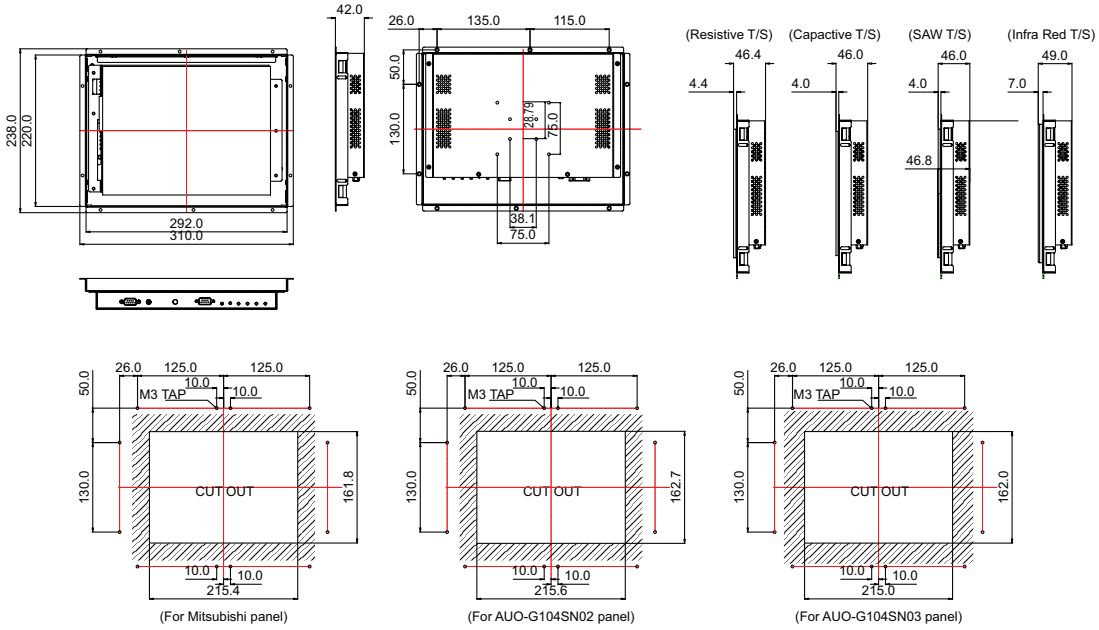

Figure 2.5 ES-2110 Dimensions

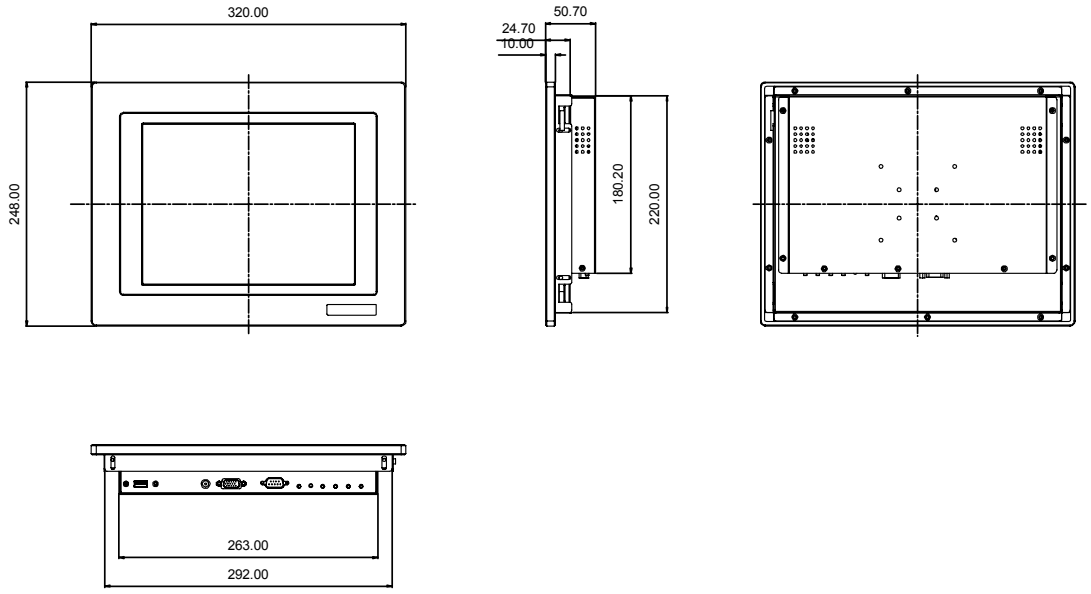

Figure 2.6 ES-2210 Dimensions

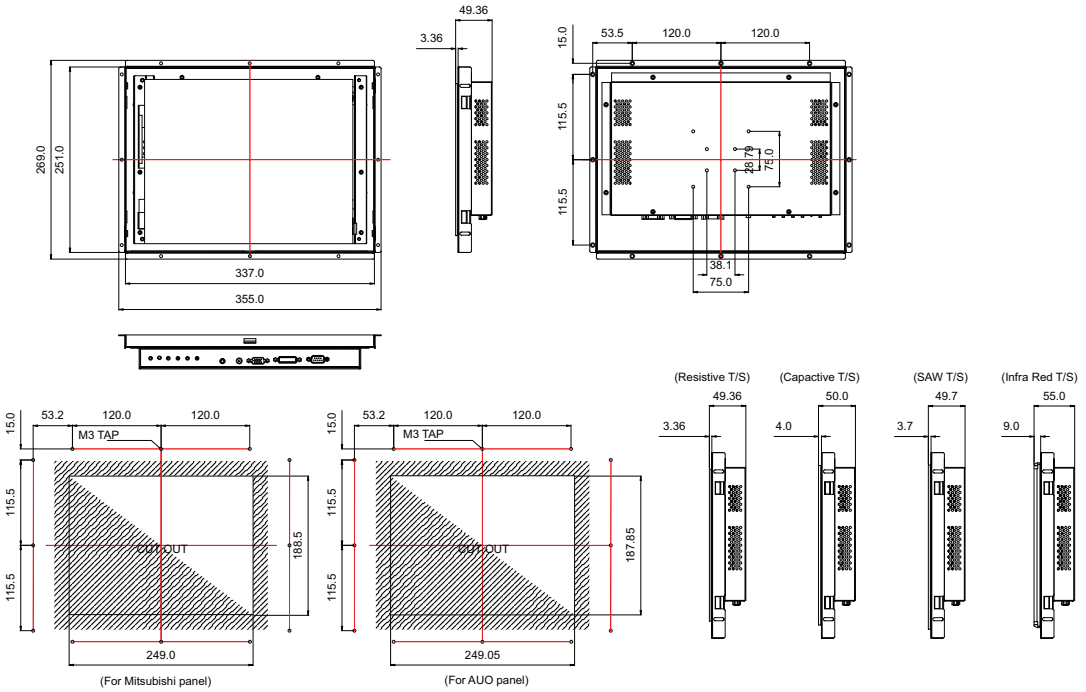

Figure 2.7 ES-2112 Dimensions

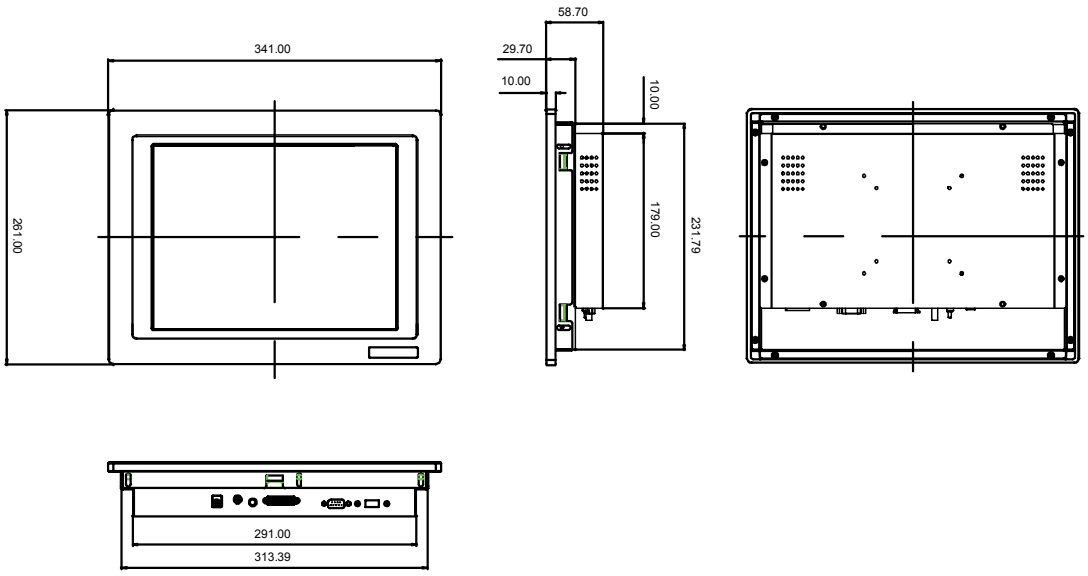

Figure 2.8 ES-2212 Dimensions

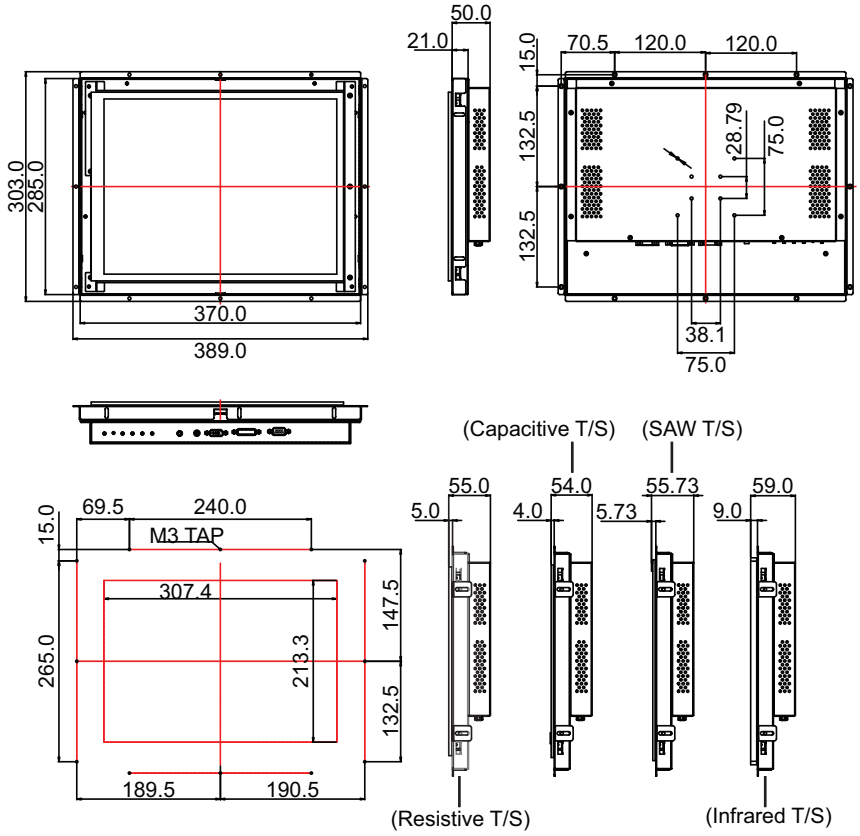

Figure 2.9 ES-2115 Dimensions

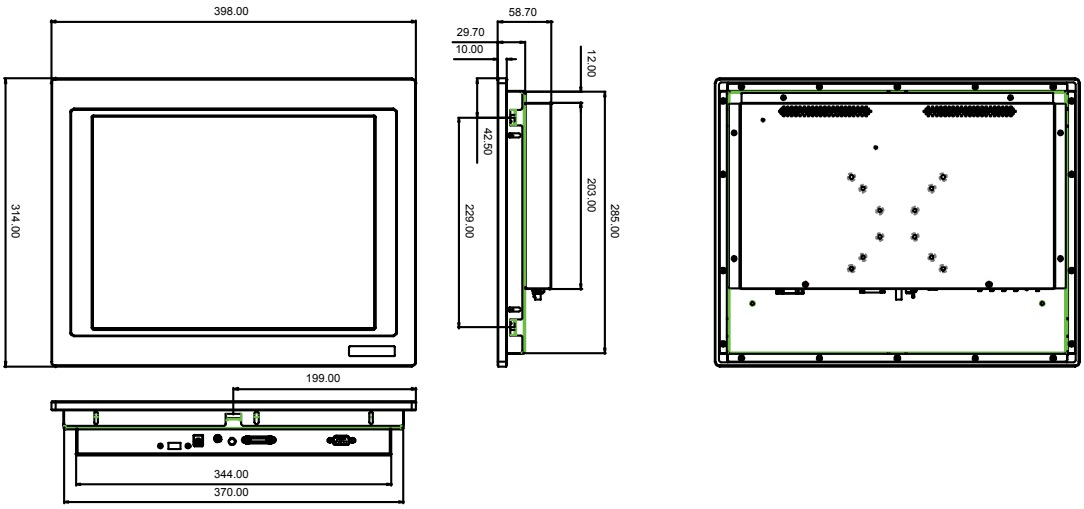

Figure 2.10 ES-2215 Dimensions

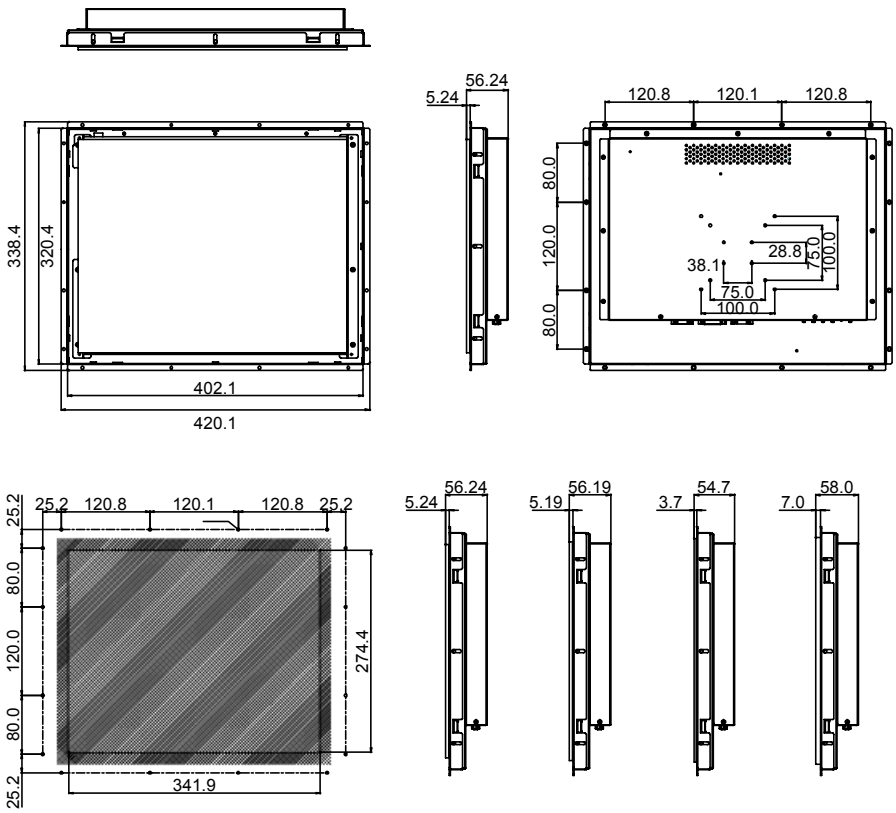

Figure 2.11 ES-2117 Dimensions

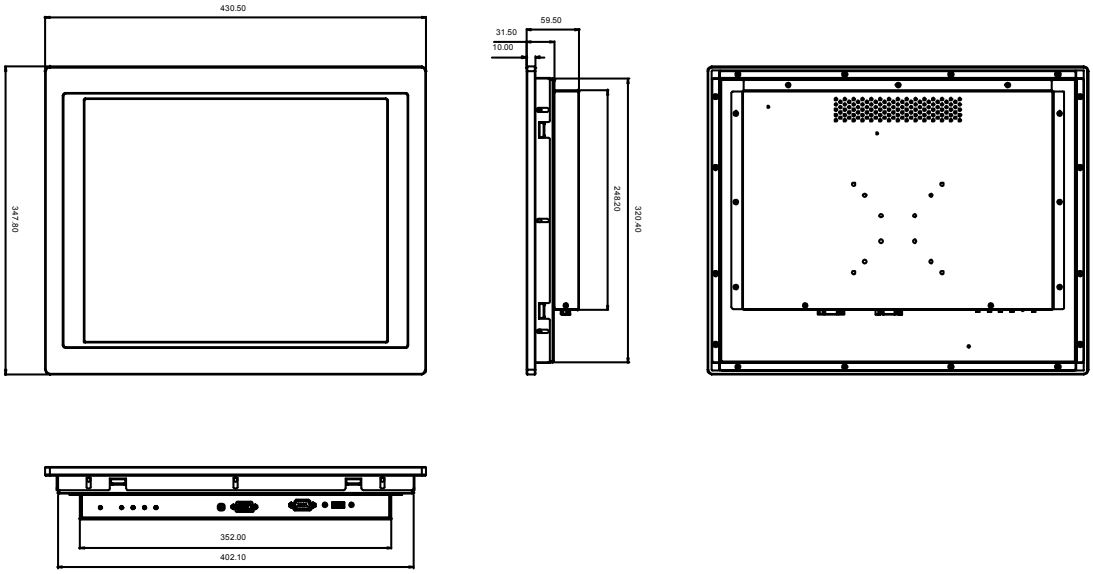

Figure 2.12 ES-2217 Dimensions

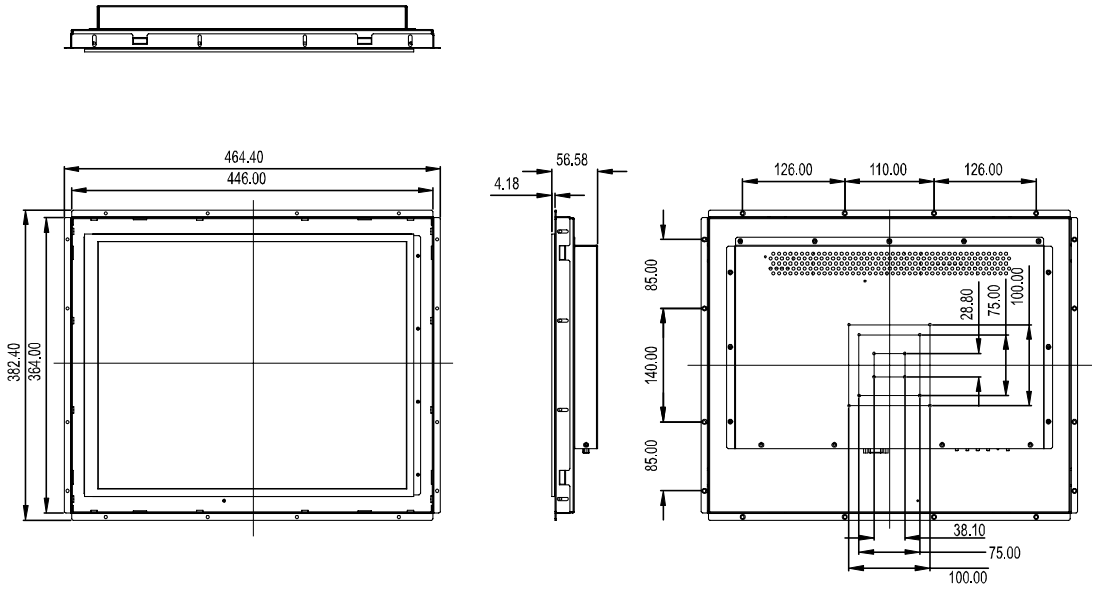

Figure 2.13 ES-2119 Dimensions

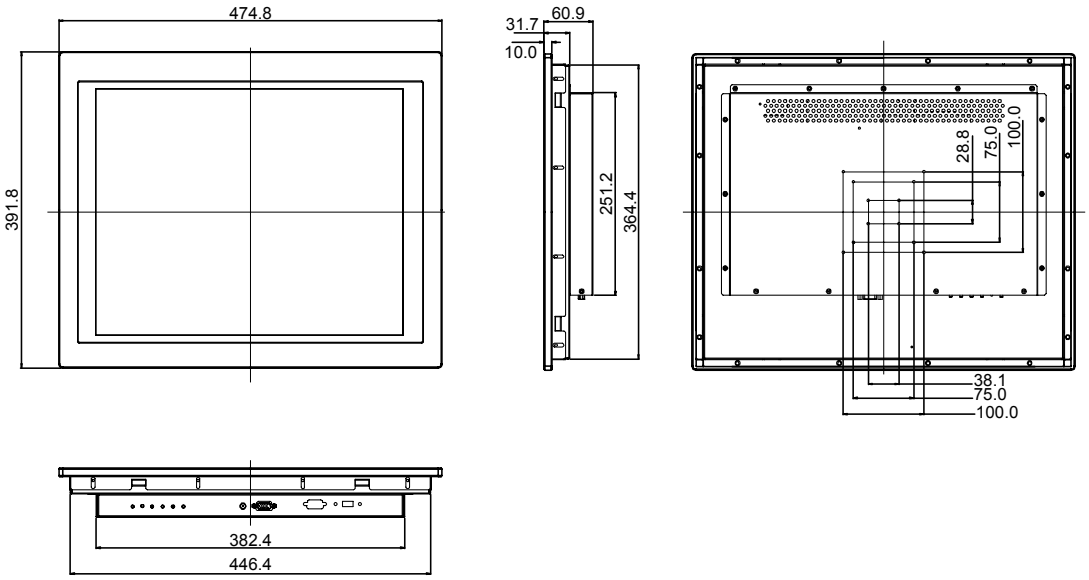

Figure 2.14 ES-2219 Dimensions

2.4 Accessory Packing

2.4.1 ES-2100 Series with Glass, VGA interface

- VGA cable 1.8 meter
- 50W power adapter
- USA power code
- Open Frame U/D/L/R mounting bracket and screws
- Open Frame rear mounting clamper set (clamps and screws)
- Power Adapter DC jack plastic clamper & screw

2.4.2 ES-2100 Series with Touch, VGA interface

- VGA cable 1.8 meter
- RS232 cable 1.8 meter
- 50W power adapter
- USA power code
- Open Frame U/D/L/R mounting bracket and screws
- Open Frame rear mounting clamper set (clamps and screws)
- Power Adapter DC jack plastic clamper & screw

2.4.3 ES-2100 Series with Touch, LVDS interface

- DB26 LVDS cable 1.0 meter (with mounting screws)
- RS232 cable 1.8 meter
- 50W power adapter
- USA power code
- Open Frame U/D/L/R mounting bracket and screws
- Open Frame rear mounting clamper set (clamps and screws)
- Power Adapter DC jack plastic clamper & screw

2.4.4 ES-2200 Series with Touch, VGA interface

- VGA cable 1.8 meter
- RS232 cable 1.8 meter
- 50W power adapter
- USA power code
- Water sponge for panel mount use x 2
- Open Frame rear mounting clamper set (clamps and screws)
- Power Adapter DC jack plastic clamper & screw
- Rubber clamper for rear mounting hole

Chapter 3

System Set Up

- Mounting kits
- Standard mounting
- Alternate mounting
- Connecting the display
- Screen resolution
- LVDS pin assignment
- LCD power jumper setting
- OSD functions
- Touch drivers

3.1 Mounting Kits

Various mounting kits are available in which LCD panels may be suitabley framed and properly mounted according to the requirements of particular applications. Mounting kit options and basic installation instructions follow below.

3.1.1 Standard mounting

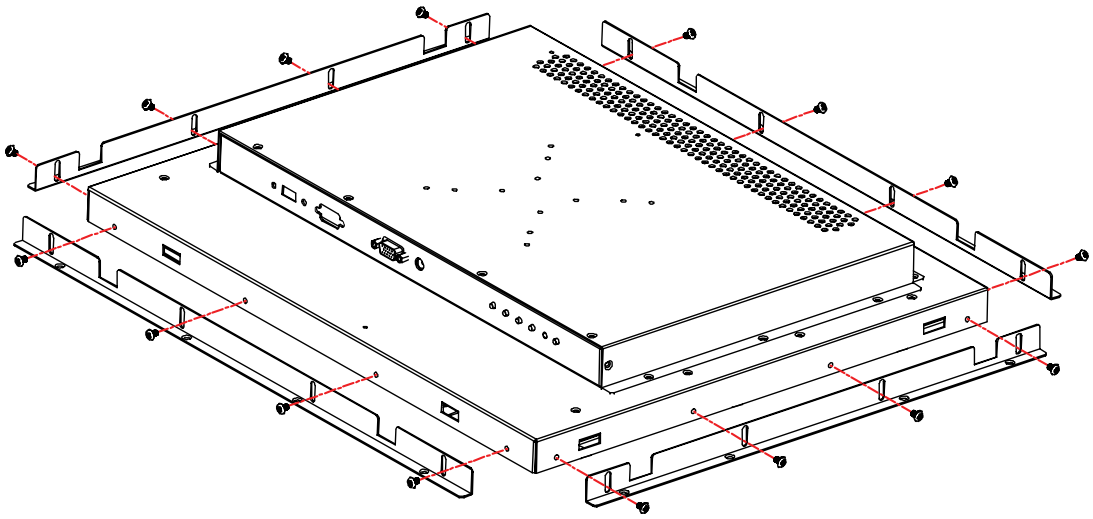

Figure 3.1 ES-2100 Open frame mounting bracket

1. Place the ES-2100:LCD open frame face down on a flat surface and lay out all the four mounting brackets and screws, (*See figure 3.1*).
2. Insert the screws and fasten them evenly all around the frame. Take care to ensure the assembly fits evenly and squarely around all four sides, (*See figure 3.2*).
3. During final installation of frames and monitors to the kiosk /machine unit, it is recommend to place water-proof sealing strips between the frames and kiosk/ machine. Because rubber or sponge sealing strips may differ for each kiosk / machine design, Advantech does not offer it in the accessory box.

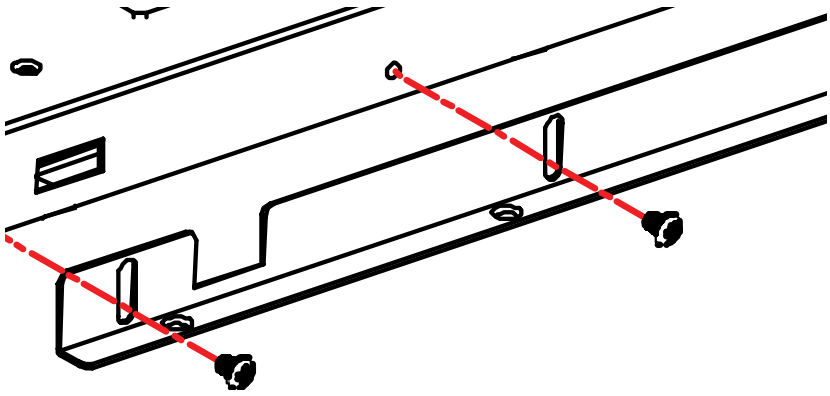

Figure 3.2 Inserting screws

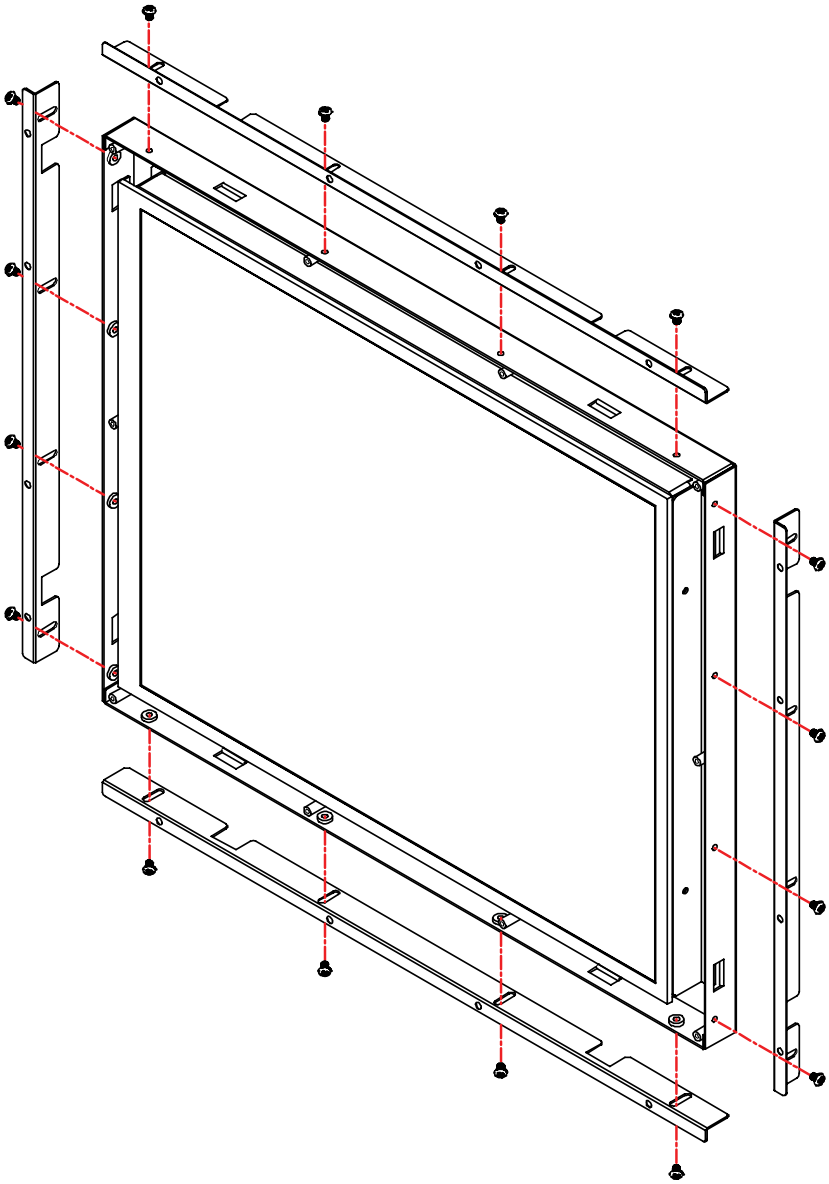

Figure 3.3 Front view of LCD and brackets

Note!

1. *Open frame brackets are precisely adjustable to match the kiosks and other mounting situations. It is possible to use any combination of the four left, right, up, down brackets; or, use only the left and right, or the up and down brackets with a rear mount of the open frame to the kiosk or other application.*
2. *All four mounting brackets (U/D/L/R) and screws are included in the accessory box.*
3. *The rear cover is drilled with the standard VESA mounting holes, 38.1mm x 38.1mm (all models), 75mm x 75mm (all models), 100mm x 100mm (15",17" & 19" models).*

3.1.2 Alternate mounting

It is possible to mount the panel using either the mounting holes on the outside edge of the frame, or by using the optional clamps and screw holes.

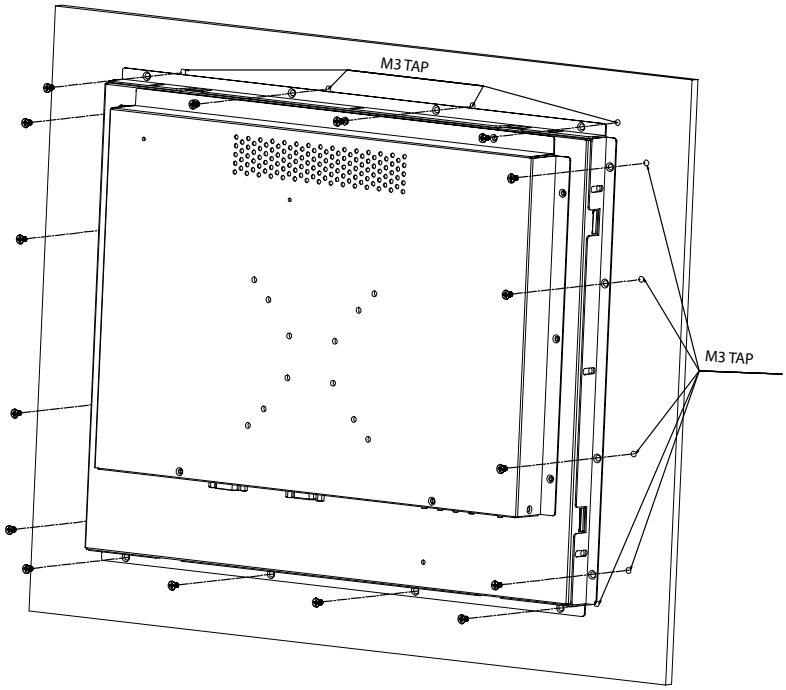

Figure 3.4 ES-2100 Rear mount with screws

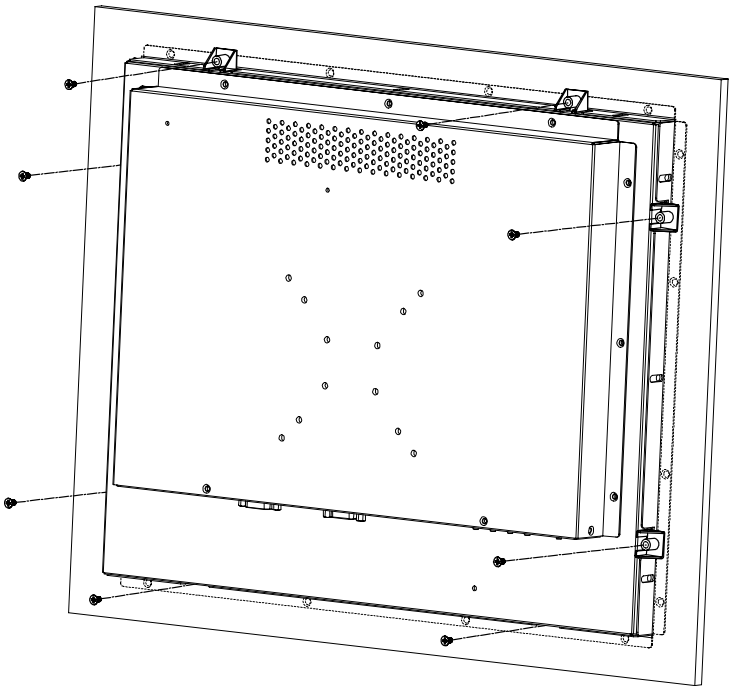

Figure 3.5 Rear mount with clamps and screws

Figure 3.6 Rear mount clamp

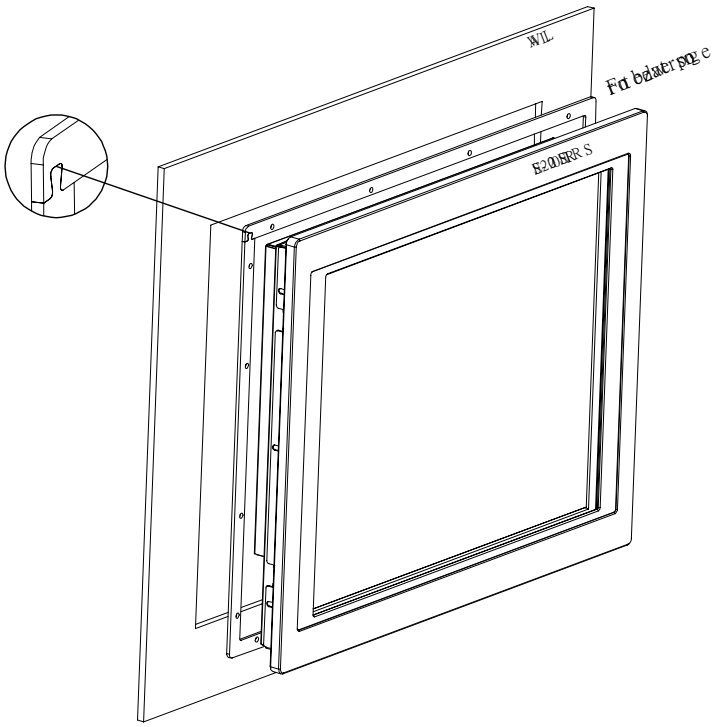

Figure 3.7 ES-2200 rugged panel mount

Note!

1. *Water proof sealing strips are included in the accessory box. Place the seals between the monitor and the kiosk/machine during the mounting process to repell water from coming inside the rear mounting brackets.*
2. *Rear mounting clamps and screws are included in the accessory box.*
3. *The rear cover is drilled with the standard VESA mounting holes, 38.1mm x 38.1mm (all models), 75mm x 75mm (all models), 100mm x 100mm (15",17" & 19" models).*

Figure 3.8 Rubber clamps for rear mounting holes

3.2 Connecting the Display

Follow the instructions below to connect the power to each display.

1. Connect the power adaptor into the DC jack of ES-2100/2200series.
2. Fasten the power cord clamp to the open frame rear cover, (as illustrated below).

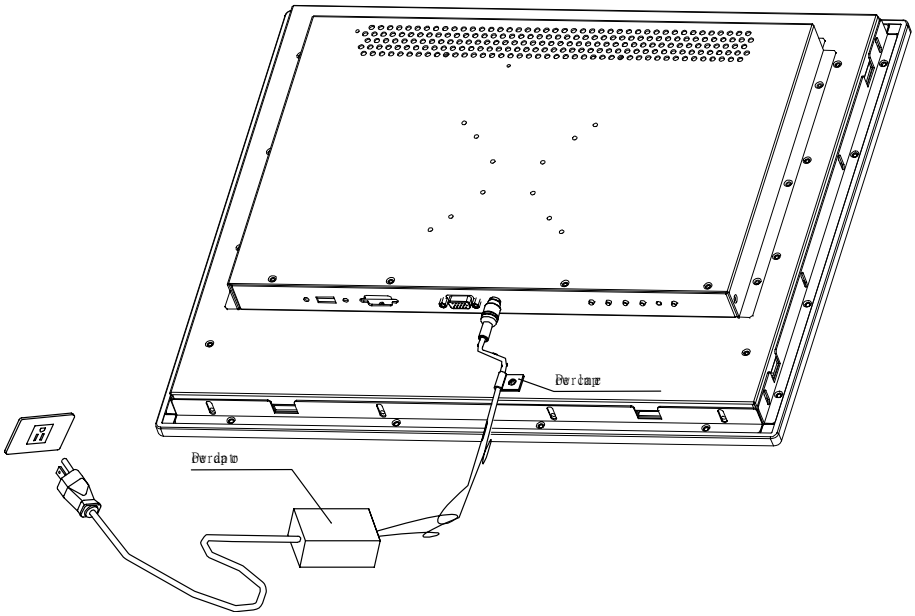

Figure 3.9 ES-2100/2200 power adaptor connection

3. If required, connect the RS-232 cable from the ES-2000 to the PC to access touchscreen controls.
4. Alternatively, an optional USB cable, P/N: 1700002215; may be ordered to access touchscreen controls.

5. Models in the ES-2100 range of open frame type mountings support VGA or LVDS connections, (as illustrated below).

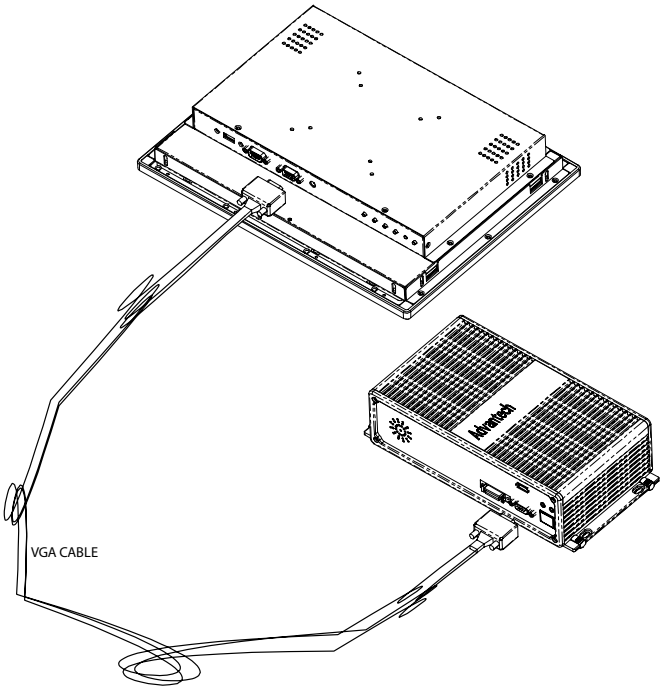

Figure 3.10 ES-2100/2200 series VGA interface

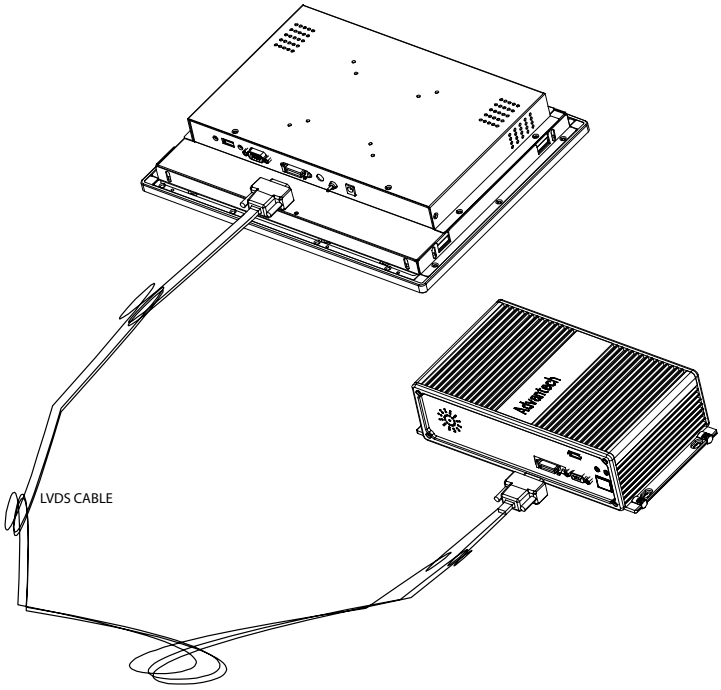

Figure 3.11 ES-2100/2200 series LVDS interface

3.3 Screen Resolution

The screen resolution must match same the LCD's resolution according to the overall size of the display. The larger the display size, the higher the resolution that is supported; select the most appropriate resolution for the monitor size according to the table below, otherwise the screen resolution may be out of range and not show the correct display.

Table 3.1: ES-2100 VGA interface: motherboard BIOS resolution setting

BIOS Resolution	ES-2100/2200 Models
640 x 480 VGA	ES-2106, ES-2206
800 x 600 SVGA	ES-2108, ES-2208, ES-2110, ES-2210, ES-2112, 2212X-VSAE
1024 x 768 XGA	ES-2112, 2212X-VXME, ES-2115, ES-2215
1280 x 1024 SXGA	ES-2117, ES-2217, ES-2119, ES-2219

Note! *Check the table above to determine the correct resolution for the appropriate ES-2100 series display. If any question remains unclear, contact the service center or sales representative for details.*

Table 3.2: ES-2100/2200 LVDS interface (if connected to Advantech ARK-338X series)

BIOS Resolution	ES-2100/2200 Models	ARK JP6 Jump Setting
640 x 480 VGA	ES-2106, ES-2206	3.3V
800 x 600 SVGA	ES-2108, ES-2208, ES-2110, ES-2210, ES-2112, 2212X-LSAE	3.3V
1024 x 768 XGA	ES-2112, 2212X-LXME, ES-2115, ES-2215	3.3V
1280 x 1024 SXGA	ES-2117, ES-2217, ES-2119, ES-2219	5V (default)

Note!

1. *The default resolution on the ARK-338X series is 1280 x 1024; therefore, the BIOS must be adjusted to the correct resolution according to the tables above. For example, the ES-2106 requires 640 x 480 VGA resolution; if the appropriate resolution is not selected in BIOS, the screen will be dark; a disconnect or off-screen notice may be displayed.*
2. *The default JP6 setting on ARK-338X series is 5V. Therefore, for the ES-2117 and ES-2119 series, the rest of ES-2100 series must change the JP6 jump setting to 3.3V.*

3.4 LVDS Pin Assignment

The ES-2100/2200 open frame LVDS pin assignments are defined below.

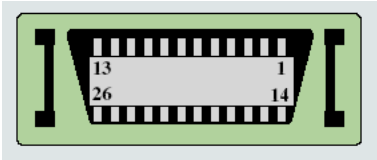

Figure 3.12 LVDS Connector

Table 3.3: LVDS Pin Assignment

Pin	Signal Name	Pin	Signal name
1	LVDS_CLKBP	**14**	ILVDS_CLKBM
2	GND	**15**	LVDS_YAM0
3	LVDS_YAPO	**16**	IVDS_YAM1
4	LVDS_YAP1	**17**	LVDS_YAM2
5	LVDS_YAP2	**18**	LVDS_CLKAM
6	LVDS_CLKAP	**19**	GND
7	+3.3 OR +5V	**20**	+3.3 OR +5V
8	GND	**21**	LVDS_YAM3
9	LVDS_YAP3	**22**	LVDS_YBMO
10	LVDS_YBPO	**23**	LVDS_YBM1
11	LVDS_YBP1	**24**	LVDS_YBM2
12	LVDS_YBP2	**25**	LVDS_YBM3
13	LVDS_YBP3	**26**	GND

3.5 LCD Power Jumper Setting (JP6)

The ARK-3389 series of embedded box computer provides a jumper JP6 located onboard the internal PCM-9380 or PCM-9386 motherboard. The jumper specifies the signal power received by the LVDS LCD, which is either 5V or 3.3V. Whenever a new LVDS LCD panel display is connected, it is necessary to adjust the JP6 LCD power setting selection to match the power requirement of the LVDS LCD panel display.

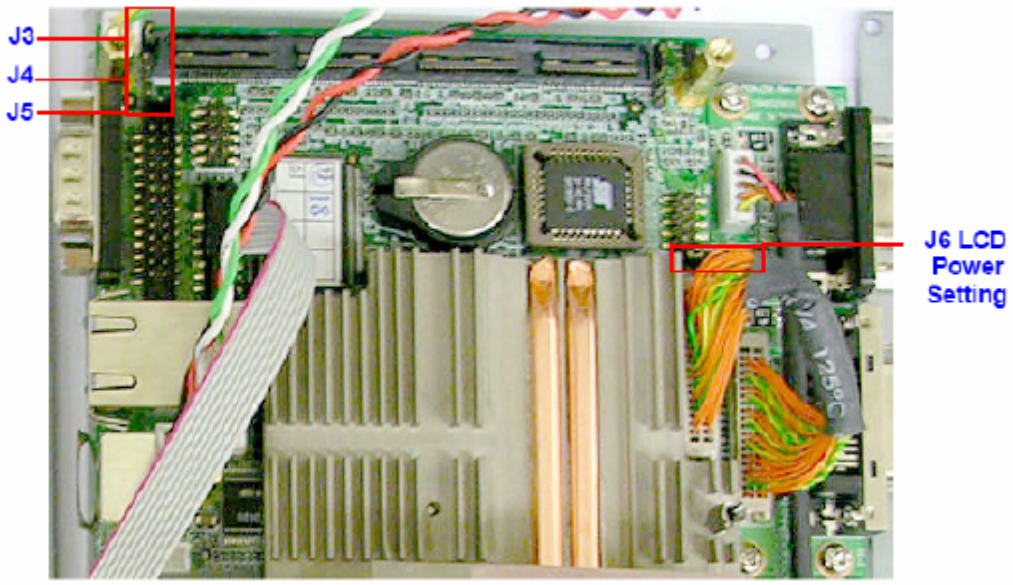

Figure 3.13 LCD power jumper location

.

Table 3.4: LCD Power Setting (JP6)

Setting	Function,
1 - 2	+5V
2 - 3	+3.3V

3.6 OSD (On-Screen Display) Functions

The OSD of the ES-2117 display (1280 x 1024 resolution) was selected to illustrate the examples below:

OSD Board (for 1280 × 1024 LCD Panel)

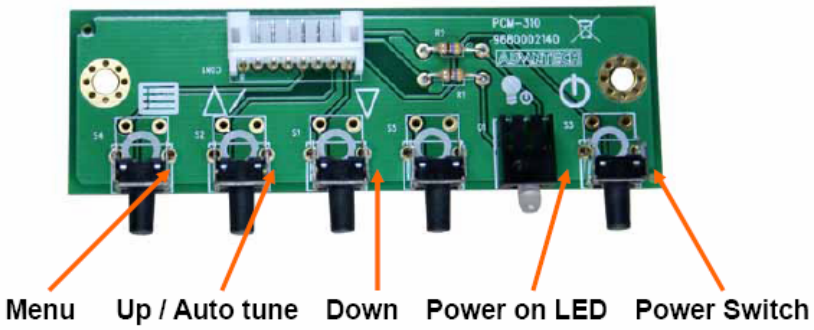

	Adjust main menu Power on LED.
	Function Adjust Up or Auto tune & Manu Adjust Down
	Adjust Down
	Power on LED
	Power Switch

Figure 3.14 ES-2117 OSD board

Realtek	1280 x 1024 60Hz				
Color	Contrast	50 -			+
Picture	Brightness	50 -			+
Function	Gamma	0	1	2	3
OSD Menu	Color Temp	9300	6500	5800	User
Misc	Color Adjust				
Exit	Exit				

Figure 3.15 Main OSD screen

3.6.1 Color

3.6.1.1 Contrast

To adjust the contrast of the screen, press “UP arrow” to increase contrast, or “DOWN arrow” to decrease contrast.

3.6.1.2 Brightness

To adjust the brightness of the screen, press “UP arrow” to increase brightness, or “DOWN arrow” to decrease brightness.

3.6.1.3 Gamma

To adjust the gamma of the screen, press “UP arrow” to increase gamma, or “DOWN arrow” to decrease gamma.

3.6.1.4 Color temperatue

To adjust the color temperature of the screen, press “UP arrow” to increase color temperature, or “DOWN arrow” to decrease color temperature.

- 9300: Sets the monitor for the standard CIE 9300 color temperature coordinate.
- 6500: Sets the monitor for the standard CIE 6500 color temperature coordinate.
- 5500: Sets the monitor for the standard CIE 5500 color temperature coordinate.
- User: For precise individual configuration of color temperature on the display.

3.6.1.5 RGB color adjustments

To adjust the RGB color output, press the “UP arrow” to increase the intensity of the selected color, or press the “DOWN arow” to decrease intensity of the selected color. Select “Exit” to return to the main menu.

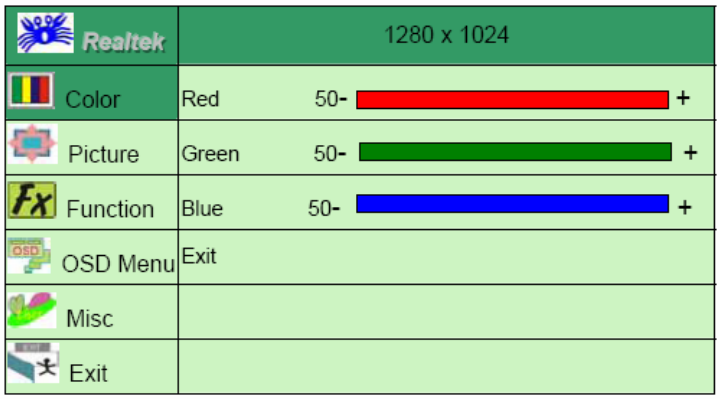

Figure 3.16 RGB adjustments

3.6.1.6 Exit

Select “Exit” to return to the main menu.

3.6.2 Picture

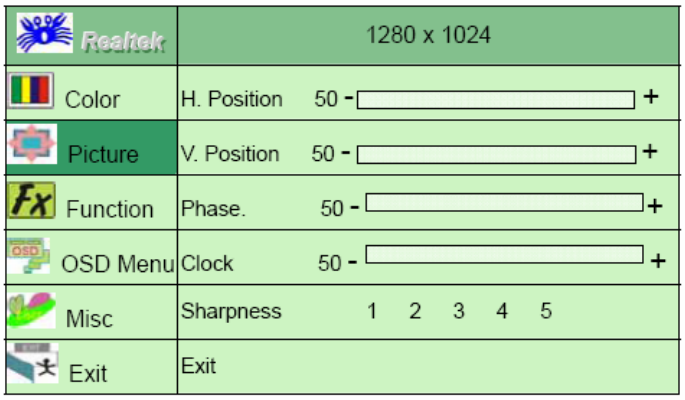

Figure 3.17 Picture adjustments

3.6.2.1 Position

- Vertical position

To adjust the vertical position of the display on the screen, press “UP arrow” or the “DOWN arrow” to move the image up or down.

- Horizontal position

To adjust the horizontal position of the display on the screen, press “UP arrow” or the “DOWN arrow” to move the image left or right.

3.6.2.2 Phase

To adjust the phase of the display on the screen, press “UP arrow” or the “DOWN arrow.” Phase adjustment may be required to optimize the display quality.

3.6.2.3 Clock

To adjust the width of the horizontal display, press the “UP arrow” or the “DOWN arrow.”

3.6.2.4 Sharpness

To adjust the sharpness of the display, press the “UP arrow” or the “DOWN arrow.”

3.6.2.5 Exit

Select “Exit” to return to the main menu.

3.6.3 Function

Realtek	1280 x 1024
Color	Auto Adjust Yes No
Picture	Auto Color Yes No
Function	Exit
OSD Menu	
Misc	
Exit	

Figure 3.18 Function adjustments

3.6.3.1 Auto Adjust

To automatically adjust the display, select Auto Adjust, “Yes.”

3.6.3.2 Auto Color

To automatically adjust the color, select Auto Color, “Yes.”

3.6.3.3 Exit

Select “Exit” to return to the main menu.

3.6.4 OSD Menu

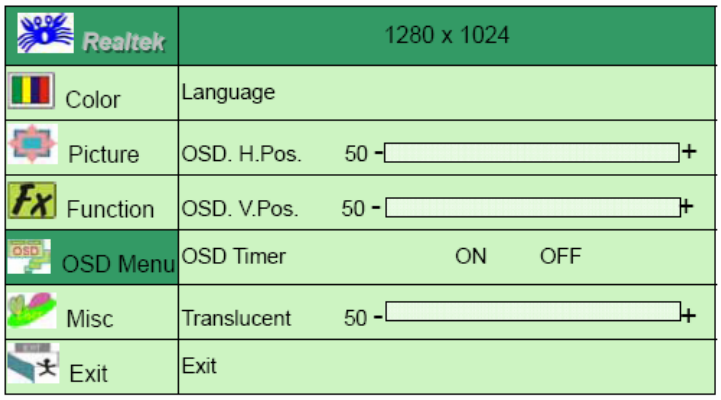

Figure 3.19 OSD display adjustments

3.6.4.1 OSD position

- Horizontal position

To adjust the horizontal position of the OSD display on the screen, press “UP arrow” or the “DOWN arrow” to move the OSD image up or down.

- Vertical position

To adjust the vertical position of the display on the screen, press “UP arrow” or the “DOWN arrow” to move the image up or down.

3.6.4.2 Translucent

To adjust the translucence of the OSD, press “UP arrow” or the “DOWN arrow.”

3.6.4.3 Exit

Select “Exit” to return to the main menu.

3.6.5 Language

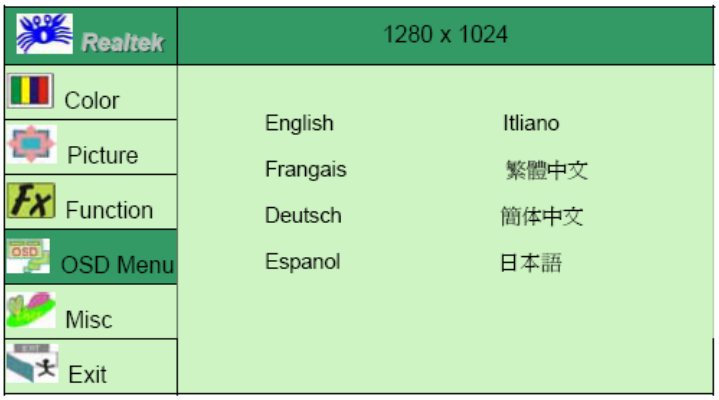

Figure 3.20 Language selection

To select the language on the OSD display, press “UP arrow” or the “DOWN arrow.”

3.6.6 Misc

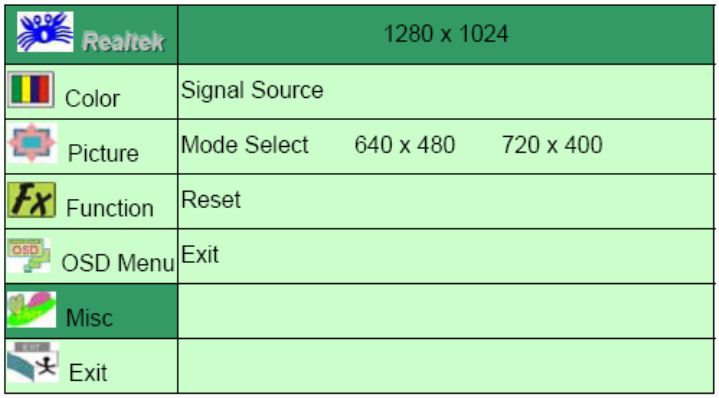

Figure 3.21 Misc selections

3.6.6.1 Mode Select

To select the display resolution, press “UP arrow” or the “DOWN arrow” to navigate between options.

3.6.6.2 Reset

Select “Reset” to restore the factory default settings.

3.6.6.3 Signal Source

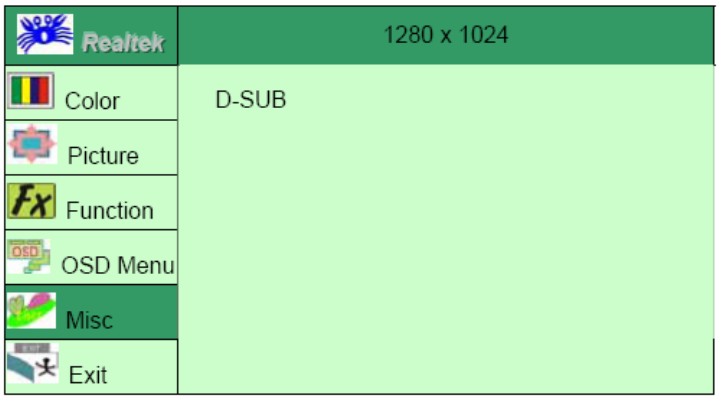

Figure 3.22 Signal source

Select the signal source to display the current signal-out port.

3.6.6.4 Exit

Select “Exit” to return to the main menu.

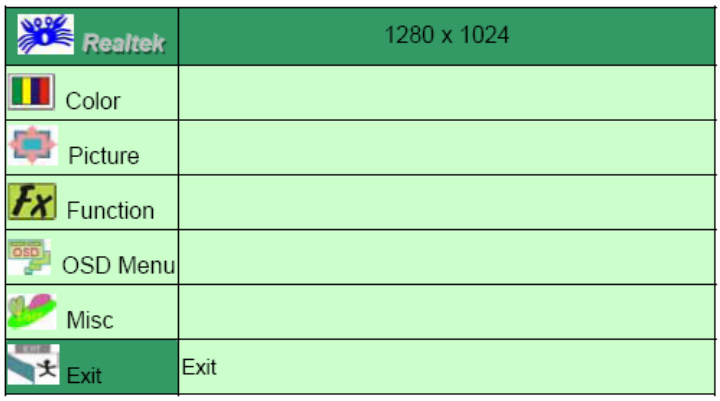

Figure 3.23 Exit selection

3.7 Touch Drivers

The touch drivers for ES-2100 / 2200 series are available online at Advantech:

http://www.advantech.com.tw/products/19-Open-Frame-Monitor/mod_1-24CE4Z.aspx

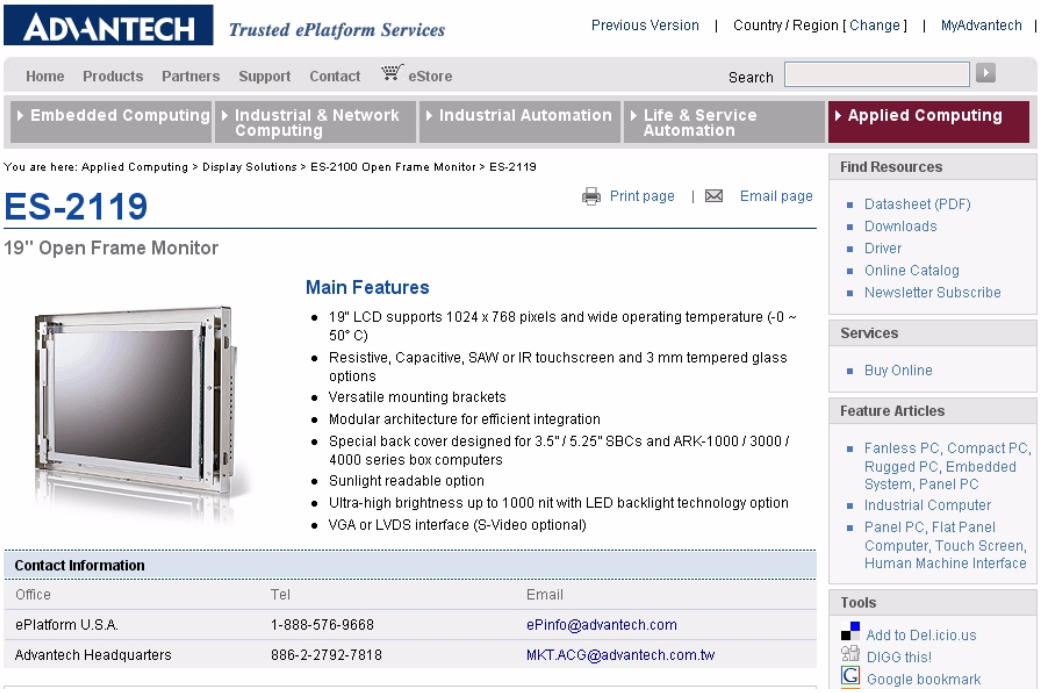

Note! *For the Resistive Touch Driver, it is necessary to use the Advantech touch driver, which is available on the Advantech website. Do not download other drivers from other touchscreen vendors' websites, to avoid the driver compatibility issues.*

Appendix A

Troubleshooting

A.1 Introduction

If experiencing trouble with the monitor, or it fails to operate correctly, please refer to the following instructions before calling the Advantech service center. If unable to correct the faults using the instructions below, then please contact the distributor or the services/repair center.

A.2 No image appears on screen

- Check to see that all the I/O and power connectors are installed correctly and connected. (Refer to 3.2, *Connecting the Display*).
- Make sure that none of the connectors are crooked, broken or loose.
- Make sure that the OSD power on the LED is turned on.
- Make sure that the brightness is not in the minimum.
- Make sure that the screen resolution is set to the correct setting for the type of LCD, and that the setting does not exceed the resolution specified for the particular model of LCD. (Refer to 3.3, *Screen Resolution*).

A.3 The image is incorrectly displayed, or the full screen image does not appear

- Please make sure the screen resolution on the motherboard is correct. (Refer to 3.3, *Screen Resolution*).

A.4 The position of screen is not in the center

- Adjust the H-position and V-position or Perform “Auto-Tune.”

A.5 Out of Range

- When the message “Out of Range” appears onscreen, it indicates that the signal of the computer is not compatible with the LCD display; i.e. the resolution exceeds the specified resolution for the LCD.
- Adjust the BIOS setting to match the correct resolution. (Refer to 3.3, *Screen Resolution*).

A.6 No Signal

- The display is powered on, but can neither receive nor display any signal from the computer. Check all power switches, power cables and VGA signal cables to ensure that all are connected correctly on both sides.

A.7 Going to Sleep

- If the system goes to sleep, then the display has either been set to power-saving mode, or the display is experiencing a sudden signal disconnection problem. Check the BIOS system settings, and/or Windows configuration. Then check the connection of the power cable to the computer on both sides.

Trusted ePlatform Services

ADVANTECH

www.advantech.com