Low Voltage Directive Report

鼎安科技股份有限公司
SUPERIOR PRODUCT CONSULTING,INC
3F,NO.10,ALLEY 6,LANE 235,PAO CHIAO RD.,HSIEN TIEN,TAIPEI,TAIWAN R.O.C.
台北縣新店市寶橋路235巷6弄10號3F
TEL:886-2-29174137 FAX:886-2-29184517

The test results of this report relate only to the tested sample identified in this report.
此份報告之測試結果只適用於報告中所述之那台測試樣機

This report shall not be reproduced, except in full, or with the written approval of Superior Product Consulting, Inc.
此份報告未經鼎安科技股份有限公司書面同意不得部分複製

TÜV Rheinland Taiwan Ltd.

TÜV

Certificate

of

Appointment

for the applicant:

Superior Product Consulting, Inc.
3F., No. 10, Alley 6, Lane 235, Pao Chiao Rd., Hsin Tien,
Taipei Hsien 231, Taiwan, R.O.C.

has been authorized to carry out safety tests by order and under supervision of TÜV Rheinland. It has successfully demonstrated capability to conduct measurement and to process test data according to:

European and International Safety Standards as listed in the Scope of Authorization on the attachment to this certificate

An assessment of the facility was conducted by TÜV Rheinland auditors according to the TÜV Rheinland requirements for "Test Site Approval" with reference to ISO 17 025:1999

Certificate No. : 10010807-2004 **Date of expiry : July 11, 2005**

TÜV Rheinland Taiwan Ltd.
Taipei, April 12, 2004

Dipl.-Ing. Andreas Klinker
Certification Body

David Lee
Lead Auditor

TÜV

Attachment to

Certificate

of Appointment
SCOPE OF AUTHORIZATION
for
Superior Product Consulting, Inc.
3F., No. 10, Alley 6, Lane 235, Pao Chiao Rd., Hsin Tien,
Taipei Hsien 231, Taiwan, R.O.C.

European Standards

EN 60 950 EN 60 065	EN 60 950-1

Basic and International Standards

IEC 60 950 IEC 60 065	IEC 60 950-1

Certificate No. : 10010807-2004

Taipei, April 12 , 2004

David Lee
Lead Auditor

Nemko

QUALIFIED INDEPENDENT LABORATORY

This is to confirm that:

Superior Product Consulting Inc.

(Taipei, TAIWAN)

has in the course of current cooperation projects with Nemko shown to be qualified in safety testing of electrical equipment to the following standards:

IEC 60950 / EN 60950

This statement is also supported by our assessment of the laboratory testing equipment, -facilities and -procedures relative to the requirements of EN 45001 and ISO/IEC Guide 25.

NEMKO
IT and Electronics Department

Jon Ivar Tidemann
Head of dept. Data and Electronics

DECLARATION OF CONFORMITY

According to the Low Voltage Directive 73/23/EEC and the Amendment Directive 93/68/EEC

Type of Product ..... :	**Computer**
Model Designation ..... :	**PPC-L60TXXXXXXXX, where X can be any alphanumeric character or blank.**
Manufacturer's Name ..... :	**Advantech Co., Ltd.**
Manufacturer's Address.... :	**4th Fl, No. 108-3, Ming-Chung Rd, Shing-Tien City, Taipei Hsien, Taiwan**

Is herewith confirmed to comply with the requirements set out in the Council Directive 73/23/EEC for electrical equipment used within certain voltage limits and the Amendment Directive 93/68/EEC. For the evaluation of the compliance with these Directive, the following standard was applied:

IEC 60950-1 Edition (2001)

EN 60950-1 Edition (2001)

Person responsible for making this declaration

Name, Surname .....:

Position/Title .....:

CE

_____	_____	_____
(Place)	(Date)	(Company stamp and signature)

COVER PAGE FOR TEST REPORT

Product:	Computer
Model/Type Reference:	PPC-L60TXXXXXXXX, where X can be any alphanumeric character or blank.
Rating(s):	I/P: 12-24 Vdc, 0.8 A
Standards:	IEC 60950-1 / EN 60950-1, First Edition
Applicant Name	ADVANTECH CO LTD
Applicant Address:	4TH FL, 108-3 MING-CHUAN RD, SHING-TIEN CITY, TAIPEI HSIEN TAIWAN
Result:	Pass

This Report includes the following parts, in addition to this cover page:

1. Clause Verdicts
2. Critical Components
3. Test Results
4. Enclosures

,

,

This is to certify that representative samples of the products covered by this Test Report have been investigated by “Superior Product Consulting, Inc.” in accordance with the above referenced Standards. The products have been found to comply with the requirements.

This report shall not be reproduced, except in full, or with the written approval of “Superior Product Consulting, Inc.”.

Test Report By: Reviewed By:

Peter Lai Allen Huang

TEST REPORT

IEC 60950-1 / EN 60950-1, First Edition
Information technology equipment - Safety-
Part 1: General Requirements

Report Reference No ..... :	SPCLVD41060
Compiled by ..... :	Peter Lai
Reviewed by ..... :	Allen Huang
Date of issue ..... :	November 22, 2004
Testing laboratory name ..... :	- Superior Product Consulting, Inc.
Testing location ..... :	235 6 10 3 3F, No. 10, Alley 6, Lane 235, Pao Chiao Rd., Hsien Tien, Taipei, Taiwan
Client name..... :	ADVANTECH CO LTD
Address ..... :	4TH FL, 108-3 MING-CHUAN RD, SHING-TIEN CITY, TAIPEI HSIEN TAIWAN
Standards ..... :	IEC 60950-1 / EN 60950-1, First Edition
Test procedure ..... :	QE-19 IEC/EN 60950-1
Non-standard test method..... :	NA
Test item description..... :	Computer
Trademark ..... :	ADVANTECH
Model and/or type reference ... :	PPC-L60TXXXXXXXX, where X can be any alphanumeric character or blank.
Rating(s)..... :	Input: 12-24 Vdc, 0.8 A

Particulars: test item vs. test requirements

Equipment mobility..... :	for building-in
Operating condition ..... :	continuous
Mains supply tolerance (%) ..... :	N/A

IT	Tested for IT power systems ..... :	No
IT	IT testing, phase-phase voltage (V) :	N/A
-	Class of equipment ..... :	Class III (supplied by SELV)
	Mass of equipment (kg)..... :	1.8
	Protection against ingress of water ..... :	IP X0

Possible test case verdicts:

-	test case does not apply to the test object ... :	N / A
-	test object does meet the requirement ..... :	Pass
-	test object does not meet the requirement ..... :	Fail (acceptable only if a corresponding, less stringent national requirement is "Pass")

General remarks:

- "(see Enclosure #)" refers to additional information appended to the Test Report
- "(see table)" refers to a table appended to the Test Report
- Throughout the Test Report a point is used as the decimal separator

GENERAL PRODUCT INFORMATION:	
A1.0	**Report Summary**
A1.1	N/A
B1.0	**Product Description**
B1.1	This product is a computer incorporating a touch screen panel. The unit consists of a motherboard with CPU, DC/AC inverter board, LCD, hard disk drive housed in a metal enclosure. The unit is not investigated for connection to Telecommunication Network Voltage (TNV) circuit. The unit is intended to be used with a UL Listed Limited Power Source (LPS) external power adapter supplied with the unit.
C1.0	**Model Differences**
C1.1	N/A
D1.0	**Additional Information**
D1.1	The report was re-issued on November 22, 2004, with the following corrections: Corrections made to Table 1.5.1 and Test Report.

1	**GENERAL**		Pass
1.5	Components		Pass
1.5.1	General		Pass
	IEC 60950 Comply with IEC 60950 or relevant component standard	Components which are found to affect safety, comply with the requirements of this standard or within the safety aspects of the relevant IEC component standards. See appended table 1.5.1.	Pass
1.5.2	Evaluation and testing of components	Components, which are certified to IEC and/or national standards, are used correctly within their ratings or have been evaluated during this approval.	Pass
1.5.3	Thermal controls	No thermal controls provided.	N/A
1.5.4	Transformers	Investigated in certification of external power adapter.	Pass
1.5.5	Interconnecting cables	No interconnecting cables.	N/A
1.5.6	Capacitors in primary circuits ...:	Investigated in certification of external power adapter.	Pass
1.5.7	Double insulation or reinforced insulation bridged by components	Investigated in certification of external power adapter.	N/A
1.5.7.1	General		N/A
1.5.7.2	Bridging capacitors	Investigated in certification of external power adapter.	N/A
1.5.7.3	Bridging resistors	Investigated in certification of external power adapter.	N/A
1.5.7.4	Accessible parts	Investigated in certification of external power adapter.	N/A
1.5.8	IT Components in equipment for IT power systems	Not for use on IT systems.	N/A

1.6	**Power interface**		Pass
1.6.1	AC power distribution systems		Pass

1.6.2	Input current	Steady state input current of unit did not exceed rated current by more than 10% under Maximum Normal Load. See Table 1.6.2 for details. Maximum Normal Load: USB port loaded to 0.5 A.	Pass
1.6.3	Voltage limit of hand-held equipment	Unit is not a hand-held.	N/A
1.6.4	Neutral conductor	Investigated in certification of external power adapter.	N/A

1.7	**Marking and instructions**		Pass
1.7.1	Power rating	Rating marking readily visible to operator.	Pass
	(V) Rated voltage(s) or voltage range(s) (V) .....:	See cover page for details.	Pass
	Symbol for nature of supply, for d.c. only.....:	Class III equipment.	N/A
	Hz Rated frequency or rated frequency range (Hz) .....:	See cover page for details.	N/A
	(mA A) Rated current (mA or A) .....:	See cover page for details.	Pass
	Manufacturer's name or trademark or identification mark.....:	See cover page for details.	Pass
	Type/model or type reference :	See cover page for details.	Pass
	II " " II Symbol for Class II equipment only.....:		N/A
	Other symbols		N/A
	Certification marks .....:	UL, c-UL Recognition Mark	Pass
1.7.2	Safety instructions	Safety instructions in English.	Pass
1.7.3	Short duty cycles		N/A
1.7.4	Supply voltage adjustment .....:		N/A
1.7.5	Power outlets on the equipment :		N/A
1.7.6	Fuse identification .....:		N/A
1.7.7	Wiring terminals		N/A
1.7.7.1	Protective earthing and bonding terminals .....:		N/A
1.7.7.2	Terminal for a.c. mains supply conductors		N/A

1.7.7.3	Terminals for d.c. mains supply conductors		N/A
1.7.8	Controls and indicators		Pass
1.7.8.1	Identification, location and marking.....:	The function of controls affecting safety is obvious regardless of language.	N/A
1.7.8.2	Colours .....:	Only functional indicators use color.	Pass
1.7.8.3	Symbols according to IEC 60417		N/A
1.7.8.4	Markings using figures .....:		N/A
1.7.9	Isolation of multiple power sources .....:	.	N/A
1.7.10	IT IT power distribution systems		N/A
1.7.11	Thermostats and other regulating devices		N/A
1.7.12	Language .....:	Reviewed only English markings/instructions.	-
1.7.13	Durability	All markings provided on UL Recognized Component labels suitable for surface they are applied upon and meet the durability test.	Pass
1.7.14	Removable parts	No marking is located on removable parts.	Pass
1.7.15	Replaceable batteries	Required warning is in service manual.	Pass
	Language .....:	English.	-
1.7.16	Operator access with a tool:		N/A
1.7.17	Equipment for restricted access locations .....:		N/A

2	**PROTECTION FROM HAZARDS**		Pass
2.1	Protection from electric shock and energy hazards		Pass
2.1.1	Protection in operator access areas	External power adapter has LPS/SELV output.	N/A
2.1.1.1	Access to energized parts		N/A
	Test by inspection.....:		N/A
	(2A)Test with test finger .....:		N/A
	(2B)Test with test pin .....:		N/A

	(2C)Test with test probe ....:		N/A
2.1.1.2	Battery compartments.....:		N/A
2.1.1.3	ELV Access to ELV wiring		N/A
	(V), (mm) Working voltage (V) ; minimum distance (mm) through insulation .....:		-
2.1.1.4	Access to hazardous Voltage circuit wiring		N/A
2.1.1.5	Energy hazards.....:		N/A
2.1.1.6	Manual controls		N/A
2.1.1.7	Discharge of capacitors in equipment	Investigated in certification of external power adapter.	N/A
	(s); (V) T ime-constant (s) ; measured voltage (V) .....:		-
2.1.2	Protection in service access areas		N/A
2.1.3	Protection in restricted access locations		N/A

2.2	**SELV SELV circuits**		Pass
2.2.1	General requirements	The secondary circuits were tested as SELV. See 2.2.1 to 2.2.4.	Pass
2.2.2	(V) Voltages under normal conditions (V) .....:	All accessible voltages are less than 42.4 Vpk or 60 V dc and are classified as SELV.	Pass
2.2.3	(V) Voltages under fault conditions (V) .....:	Under fault conditions voltages never exceed 71 Vp and 120 V dc and do not exceed 42.4 Vp or 60 V dc for more than 0.2 sec.	Pass
2.2.3.1	(1) Separation by double insulation or reinforced insulation (method 1)	Investigated in certification of external power adapter.	Pass
2.2.3.2	(2)Separation by earthed screen (method 2)		N/A
2.2.3.3	SELV (3)Protection by earthing of the SELV circuit (method 3)		N/A
2.2.4	SELV Connection of SELV circuits to other circuits .....:	SELV circuits are only connected to other SEC circuits.	Pass

2.3	**TNV TNV circuits**		N/A
2.3.1	Limits		N/A
	TNV Type of TNV circuits.....:		-
2.3.2	Separation from other circuits and from accessible parts		N/A
	Insulation employed .....:		-
2.3.3	Separation from hazardous voltages		N/A
	Insulation employed .....:		-
2.3.4	TNV Connection of TNV circuits to other circuits		N/A
	Insulation employed .....:		-
2.3.5	Test for operating voltages generated externally		N/A

2.4	**Limited current circuits**		Pass
2.4.1	General requirements		Pass
2.4.2	Limit values	CN3 pin 1 to pin 2: 1) Normal: 36.4 mA 2) R17 Short: shut down 3) R19 Open : 36.4 mA CN3 pin 1 to Earth: 1) Normal: 36.4 mA 2) R17 Short: shut down 3) R19 Open : 36.4 mA CN3 pin 2 to Earth: 1) Normal: 0.7 mA 2) R17 Short: shut down 3) R19 Open : 0.7 mA	Pass

	Frequency (Hz) .....:	CN3 pin 1 to pin 2: 1) Normal: 52 kHz 2) R17 Short: shut down 3) R19 Open: 52 kHz CN3 pin 1 to Earth: 1) Normal: 52 kHz 2) R17 Short: shut down 3) R19 Open: 52 kHz CN3 pin 2 to Earth: 1) Normal: 0.022 kHz 2) R17 Short: shut down 3) R19 Open: 0.022 kHz 4) Q2 (C-E) Short: 16 kHz	-
	Measured current (mA) .....:	CN3 pin 1 to pin 2: 1) Normal: 8.5 mA 2) R17 Short: shut down 3) R19 Open : 8.5 mA CN3 pin 1 to Earth: 1) Normal: 11.5 mA 2) R17 Short: shut down 3) R19 Open : 11.5 mA CN3 pin 2 to Earth: 1) Normal: 2.1 mA 2) R17 Short: shut down 3) R19 Open : 2.1 mA	-

	Measured voltage (V) .....:	CN3 pin 1 to pin 2: 1) Normal: 17 Vpk 2) R17 Short: shut down 3) R19 Open : 17 Vpk CN3 pin 1 to Earth: 1) Normal: 23 Vpk 2) R17 Short: shut down 3) R19 Open : 23 Vpk CN3 pin 2 to Earth: 1) Normal: 4.2 Vpk 2) R17 Short: shut down 3) R19 Open : 4.2 Vpk	-
	Measured capacitance (mF) .....:	33pF	-
2.4.3	Connection of limited current circuits to other circuits	LCC connected to SELV circuit.	Pass

2.5	**Limited power sources**		N/A
	Inherently limited output	Investigated in certification of external power adapter. External power adapter has LPS output.	N/A
	Impedance limited output		N/A
	Overcurrent protective device limited output		N/A
	Regulating network limited output under normal operating and single fault condition		N/A
	Regulating network limited output under normal operating conditions and overcurrent protective device limited output under single fault condition		N/A
	Output voltage (V), output current (A) , apparent power (VA): .....:		-
	Current rating of overcurrent protective device (A) .....:		-

2.6	**Provisions for earthing and bonding**		N/A
2.6.1	Protective earthing	Class III unit.	N/A
2.6.2	Functional earthing		N/A
2.6.3	Protective earthing and protective bonding conductors		N/A
2.6.3.1	General		N/A
2.6.3.2	Size of protective earthing conductors		N/A
	Rated current (A), cross-sectional area (mm2), AWG .....:		-
2.6.3.3	Size of protective bonding conductors		N/A
	Rated current (A), cross-sectional area (mm2), AWG .....:		-
2.6.3.4	, Resistance (W) of earthing conductors and their terminations, test current (A) .....:		N/A
2.6.3.5	Colour of insulation .....:		N/A
2.6.4	Terminals		N/A
2.6.4.1	General		N/A
2.6.4.2	Protective earthing and bonding terminals		N/A
	Rated current (A), type and nominal thread diameter (mm) .....:		-
2.6.4.3	Separation of the protective earthing conductor from protective bonding conductors		N/A
2.6.5	Integrity of protective earthing		N/A
2.6.5.1	Interconnection of equipment		N/A
2.6.5.2	Components in protective earthing conductors and protective bonding conductors		N/A
2.6.5.3	Disconnection of protective earth		N/A
2.6.5.4	Parts that can be removed by an operator		N/A
2.6.5.5	Parts removed during servicing		N/A

2.6.5.6	Corrosion resistance		N/A
2.6.5.7	Screws for protective bonding		N/A
2.6.5.8	Reliance on telecommunication network or cable distribution system		N/A

2.7	**Overcurrent and earth fault protection in primary circuits**		N/A
2.7.1	Basic requirements	Investigated in certification of external power adapter.	N/A
	Instructions when protection relies on building installation		N/A
2.7.2	5.3 Faults not covered in 5.3		N/A
2.7.3	Short-circuit backup protection		N/A
2.7.4	Number and location of protective devices .....:		N/A
2.7.5	Protection by several devices		N/A
2.7.6	Warning to service personnel .....:		N/A

2.8	**Safety interlocks**		N/A
2.8.1	General principles		N/A
2.8.2	Protection requirements		N/A
2.8.3	Inadvertent reactivation		N/A
2.8.4	Fail-safe operation		N/A
2.8.5	Moving parts		N/A
2.8.6	Overriding		N/A
2.8.7	Switches and relays		N/A
2.8.7.1	Contact gaps (mm) .....:		N/A
2.8.7.2	Overload test		N/A
2.8.7.3	Endurance test		N/A
2.8.7.4	Electric strength test		N/A
2.8.8	Mechanical actuators		N/A

2.9	**Electrical insulation**	N/A

2.9.1	Properties of insulating materials	Investigated in certification of external power adapter.	N/A
2.9.2	Humidity conditioning		N/A
	Humidity (%) .....:		-
	Temperature (°C) .....:		-
2.9.3	Grade of insulation		N/A

2.10	**Clearances, creepage distances and distances through insulation**		Pass
2.10.1	General		Pass
2.10.2	Determination of working voltage	Investigated in certification of external power adapter.	N/A
2.10.3	Clearances		Pass
2.10.3.1	General		Pass
2.10.3.2	Clearances in primary circuit	Investigated in certification of external power adapter.	N/A
2.10.3.3	Clearances in secondary circuits	See Sub clause 5.3.4 for details.	Pass
2.10.3.4	Measurement of transient voltage levels		N/A
2.10.4	Creepage distances	See Sub clause 5.3.4 for details.	Pass
	CTI ( ) CTI tests .....:		-
2.10.5	Solid insulation	Investigated in certification of external power adapter.	N/A
2.10.5.1	Minimum distance through insulation		N/A
2.10.5.2	Thin sheet material		N/A
	Number of layers (pcs).....:		-
	Electric strength test.....:		-
2.10.5.3	Printed boards		N/A
	Distance through insulation		N/A
	Electric strength test for thin sheet insulating material :		-
	Number of layers (pcs).....:		N/A
2.10.5.4	Wound components		N/A

	Number of layers (pcs).....:		N/A
	45° 90° Two wires in contact inside wound component; angle between 45° and 90°.....:		N/A
2.10.6	Coated printed boards		N/A
2.10.6.1	General		N/A
2.10.6.2	Sample preparation and preliminary inspection		N/A
2.10.6.3	Thermal cycling		N/A
2.10.6.4	Thermal ageing (°C) .....:		N/A
2.10.6.5	Electric strength test.....:		-
2.10.6.6	Abrasion resistance test		N/A
	Electric strength test.....:		-
2.10.7	Enclosed and sealed parts .....:		N/A
	Temperature T1=T2 = Tma - Tamb +10K (°C) .....:		N/A
2.10.8	Spacings filled by insulating compound .....:		N/A
	Electric strength test.....:		-
2.10.9	Component external terminations		N/A
2.10.10	Insulation with varying dimensions		N/A

3	**WIRING, CONNECTIONS AND SUPPLY**		Pass
3.1	General		Pass
3.1.1	Current rating and overcurrent protection	Investigated in certification of external power adapter.	N/A
3.1.2	Protection against mechanical damage	Wires are routed away from sharp edges, etc. and are adequately fixed to prevent excessive strain on wire and terminals.	Pass

3.1.3	Securing of internal wiring	Wires are positioned in such a manner that prevents excessive strain, loosening of terminal connections and damage of conductor insulation.	Pass
3.1.4	Insulation of conductors	Insulation on internal conductors is considered to be of adequate quality and suitable for application and working voltages involved.	Pass
3.1.5	Beads and ceramic insulators		N/A
3.1.6	Screws for electrical contact pressure		N/A
3.1.7	Insulating materials in electrical connections		N/A
3.1.8	Self-tapping and spaced thread screws		N/A
3.1.9	Termination of conductors	All conductors are reliably secured.	Pass
	10N 10 N pull test	Investigated in certification of external power adaptor.	N/A
3.1.10	Sleeving on wiring		N/A

3.2	**Connection to an a.c. mains supply or a d.c. mains supply**		N/A
3.2.1	Means of connection	Investigated in certification of external power adapter.	N/A
3.2.1.1	Connection to an a.c. mains supply		N/A
3.2.1.2	Connection to a d.c. mains supply		N/A
3.2.2	Multiple supply connections		N/A
3.2.3	Permanently connected equipment		N/A

	, Number of conductors, diameter (mm) of cable and conduits .....:		-
3.2.4	Appliance inlets		N/A
3.2.5	Power supply cords		N/A
3.2.5.1	AC power supply cords		N/A
	Type .....:		-
	Rated current (A), cross-sectional area (mm2), AWG .....:		-
3.2.5.2	DC power supply cords		N/A
3.2.6	Cord anchorages and strain relief		N/A
	, Mass of equipment (kg), pull (N):		-
	Longitudinal displacement (mm) .....:		-
3.2.7	Protection against mechanical damage		N/A
3.2.8	Cord guards		N/A
	D (mm); test mass (g) .....:		-
	Radius of curvature of cord (mm) .....:		-
3.2.9	Supply wiring space		N/A

3.3	**Wiring terminals for connection of external conductors**		N/A
3.3.1	Wiring terminals		N/A
3.3.2	Connection of non-detachable power supply cords		N/A
3.3.3	Screw terminals		N/A
3.3.4	Conductor sizes to be connected		N/A
	Rated current (A), cord / cable type, cross-sectional area (mm2) .....:		-
3.3.5	Wiring terminal sizes		N/A
	Rated current (A), type and nominal thread diameter (mm) .....:		-
3.3.6	Wiring terminals design		N/A
3.3.7	Grouping of wiring terminals		N/A
3.3.8	Stranded wire		N/A

3.4	**Disconnection from the mains supply**		N/A
3.4.1	General requirement	Class III unit.	N/A
3.4.2	Disconnect devices		N/A
3.4.3	Permanently connected equipment		N/A
3.4.4	Parts which remain energized		N/A
3.4.5	Switches in flexible cords		N/A
3.4.6	Single-phase equipment and d.c. equipment		N/A
3.4.7	Three-phase equipment		N/A
3.4.8	Switches as disconnect devices		N/A
3.4.9	Plugs as disconnect devices		N/A
3.4.10	Interconnected equipment		N/A
3.4.11	Multiple power sources		N/A

3.5	**Interconnection of equipment**		Pass
3.5.1	General requirements	See below.	Pass
3.5.2	Types of interconnection circuits .:	Interconnection circuits of SELV through the connectors.	Pass
3.5.3	ELV ELV circuits as interconnection circuits	No ELV interconnection circuits.	Pass

4	**PHYSICAL REQUIREMENTS**		Pass
4.1	Stability		N/A
	10° Angle of 10°		N/A
	Test: force (N).....:		N/A

4.2	**Mechanical strength**		Pass
4.2.1	General		Pass
4.2.2	10N Steady force test, 10 N		N/A
4.2.3	30N Steady force test, 30 N		N/A
4.2.4	250N Steady force test, 250 N		N/A
4.2.5	Impact test		N/A
	Fall test		N/A
	Swing test		N/A
4.2.6	Drop test		N/A
4.2.7	Stress relief test	Metal enclosure.	N/A
4.2.8	Cathode ray tubes		N/A

	CNS_(IEC 61965) Picture tube separately certified .....:		N/A
4.2.9	High pressure lamps		N/A
4.2.10	Wall or ceiling mounted equipment; force (N) .....:	Force applied: 7.2 kg Mounting means withstands force applied without breaking or damaging mounting bracket, its securing means, or that portion of unit to which it was attached.	Pass

4.3	**Design and construction**		Pass
4.3.1	Edges and corners	All edges and corners are judged to be sufficiently well rounded so as not to constitute a hazard.	Pass
4.3.2	Handles and manual controls; force (N).....:		N/A
4.3.3	Adjustable controls		N/A
4.3.4	Securing of parts	Electrical and mechanical connections and parts are expected to withstand usual mechanical stress.	Pass
4.3.5	Connection of plugs and sockets		N/A
4.3.6	Direct plug-in equipment		N/A
	Dimensions (mm) of mains plug for direct plug-in..:		N/A
	Torque and pull test of mains plug for direct plug-in; torque (Nm); pull (N) .....:		N/A
4.3.7	Heating elements in earthed equipment		N/A
4.3.8	Batteries	RTC Battery (BAT1) provided with reverse current protection by series circuit of diode, D5, and resistor, R112, rated 1k ohm. D6 (pin 2 to pin 3) Short: 1.54 mA. R112 Short: 0 mA.	Pass
4.3.9	Oil and grease		N/A

4.3.10	Dust, powders, liquids and gases		N/A
4.3.11	Containers for liquids or gases		N/A
4.3.12	Flammable liquids .....:		N/A
	Quantity of liquid (l) .....:		N/A
	Flash point (°C) .....:		N/A
4.3.13	Radiation; type of radiation		N/A
4.3.13.1	General		N/A
4.3.13.2	Ionizing radiation		N/A
	Measured radiation (pA/kg) .....:		-
	Measured high-voltage (kV) .....:		-
	Measured focus voltage (kV) .....:		-
	CRT markings .....:		-
4.3.13.3	Effect of ultraviolet (UV) radiation on materials		N/A
	Part, property, retention after test, flammability classification .....:		N/A
4.3.13.4	(UV) Human exposure to ultraviolet (UV) radiation .....:		N/A
4.3.13.5	( )Laser (including LEDs)		N/A
	Laser class .....:		-
4.3.13.6	Other types .....:		N/A

4.4	**Protection against hazardous moving parts**		Pass
4.4.1	General		N/A
4.4.2	Protection in operator access areas		N/A
4.4.3	Protection in restricted access locations		N/A
4.4.4	Protection in service access areas		N/A

4.5	**Thermal requirements**	Pass

4.5.1	Maximum temperatures	Unit and its component parts did not attain excessive temperatures during normal operation. See Table 4.5 for details.	Pass
	L Normal load condition per Annex L .....:	Operated in most unfavorable way of operation given in operating instructions until steady conditions established. See Table 4.5 for details.	Pass
4.5.2	Resistance to abnormal heat	Investigated in certification of external power adapter.	Pass

4.6	**Openings in enclosures**		Pass
4.6.1	Top and side openings	External power adapter has LPS output.	N/A
	Dimensions (mm) .....:		-
4.6.2	Bottoms of fire enclosures		N/A
	Construction of the bottom .....:		-
4.6.3	Doors or covers in fire enclosures		N/A
4.6.4	Openings in transportable equipment		N/A
4.6.5	Adhesives for constructional purposes		N/A
	/ Conditioning temperature (°C) /time (weeks) .....:		-

4.7	**Resistance to fire**		Pass
4.7.1	Reducing the risk of ignition and spread of flame		Pass
	1 - Method 1, selection and application of components wiring and materials	Method 1 used.	Pass
	2- 5.3.6 Method 2, application of all of simulated fault condition tests		Pass

4.7.2	Conditions for a fire enclosure	Investigated in certification of external power adapter. External power adapter has LPS output.	N/A
4.7.2.1	Parts requiring a fire enclosure		N/A
4.7.2.2	Parts not requiring a fire enclosure	Investigated in certification of external power adapter. External power adapter has LPS output. All internal materials are rated minimum V-2 or are mounted on PWBs rated minimum V-1. Internal wiring is marked VW-1 or FT-1. See Table 1.5.1 for details.	Pass
4.7.3	Materials		Pass
4.7.3.1	General	PWB is V-1, or better.	Pass
4.7.3.2	Materials for fire enclosures	Investigated in certification of external power adapter. External power adapter has LPS output.	N/A
4.7.3.3	Materials for components and other parts outside fire enclosures	Investigated in certification of external power adapter. External power adapter has LPS output.	N/A
4.7.3.4	Materials for components and other parts inside fire enclosures	All internal materials are rated minimum V-2 or are mounted on a PWB rated minimum V-1. Internal wiring marked VW-1 or FT-1.	Pass
4.7.3.5	Materials for air filter assemblies		N/A
4.7.3.6	Materials used in high-voltage components	DC/AC Inverter Board.	Pass

5	**ELECTRICAL REQUIREMENTS AND SIMULATED ABNORMAL CONDITIONS**	Pass

5.1	Touch current and protective conductor current		N/A
5.1.1	General	Investigated in certification of external power adapter.	N/A
5.1.2	Equipment under test (EUT)		N/A
5.1.3	Test circuit		N/A
5.1.4	Application of measuring instrument		N/A
5.1.5	Test procedure		N/A
5.1.6	Test measurements		N/A
	Test voltage (V) .....:		-
	Measured touch current (mA) .....:		-
	Max. allowed touch current (mA) .....:		-
	Measured protective conductor current (mA) .....:		-
	Max. allowed protective conductor current (mA) .....:		-
5.1.7	3.5mA Equipment with touch current exceeding 3.5 mA .....:		N/A
5.1.8	Touch currents to and from telecommunication networks and cable distribution systems and from telecommunication networks		N/A
5.1.8.1	Limitation of the touch current to a telecommunication network and a cable distribution system		N/A
	Test voltage (V) .....:		-
	Measured touch current (mA) .....:		-
	Max. allowed touch current (mA) .:		-
5.1.8.2	Summation of touch currents from telecommunication networks .....:		N/A

5.2	**Electric strength**		N/A
5.2.1	General	Investigated in certification of external power adapter.	N/A
5.2.2	Test procedure		N/A

5.3	**Abnormal operating and fault conditions**		Pass
5.3.1	Protection against overload and abnormal operation	See Table 5.3 for details.	Pass
5.3.2	Motors		N/A
5.3.3	Transformers	Investigated in certification of external power adapter.	N/A
5.3.4	Functional insulation .....:	Method c.	Pass
5.3.5	Electromechanical components	No electromechanical components provided.	N/A
5.3.6	Simulation of faults	Faults in PRI and SEC components were investigated in certification of external power adapter. Blocked Ventilation Openings Test: See Table 5.3 for details.	N/A
5.3.7	Unattended equipment		N/A
5.3.8	Compliance criteria for abnormal operating and fault conditions	No fire, emission of molten metal or deformation was noted during test.	N/A

6	**CONNECTION TO TELECOMMUNICATION NETWORKS**		N/A
6.1	Protection of telecommunication network service persons, and users of other equipment connected to the network, from hazards in the equipment		N/A
6.1.1	Protection from hazardous voltages		N/A
6.1.2	Separation of the telecommunication network from earth		N/A
6.1.2.1	Requirements		N/A
	Test voltage (V) .....:		-
	Current in the test circuit (mA) .:		-
6.1.2.2	Exclusions.....:		N/A

6.2	**Protection of equipment users from overvoltages on telecommunication networks**		N/A
6.2.1	Separation requirements		N/A
6.2.2	Electric strength test procedure		N/A
6.2.2.1	Impulse test		N/A

6.2.2.2	Steady-state test		N/A
6.2.2.3	Compliance criteria		N/A

6.3	**Protection of the telecommunication wiring system from overheating**		N/A
	Max. output current (A).....:		-
	Current limiting method .....:		-

7	**CONNECTION TO CABLE DISTRIBUTION SYSTEMS**		N/A
7.1	Protection of cable distribution system service persons, and users of other equipment connected to the system, from hazardous voltages in the equipment		N/A
7.2	Protection of equipment users from overvoltages on the cable distribution system		N/A
7.3	Insulation between primary circuits and cable distribution systems		N/A
7.3.1	General		N/A
7.3.2	Voltage surge test		N/A
7.3.3	Impulse test		N/A

A	**Annex A, TESTS FOR RESISTANCE TO HEAT AND FIRE**		Pass
A.1	1Bkg Flammability test for fire enclosures of movable equipment having a total mass exceeding 18 kg, and of stationary equipment (see 4.7.3.2)		N/A
A.1.1	Samples .....:		-
	Wall thickness (mm).....:		-
A.1.2	Conditioning of samples; temperature (°C).....:		N/A
A.1.3	Mounting of samples.....:		N/A
A.1.4	Test flame		N/A
A.1.5	Test procedure		N/A
A.1.6	Compliance criteria		N/A
	Sample 1 burning time (s).....:		-
	Sample 2 burning time (s).....:		-

	Sample 3 burning time (s).....:		-

A.2	**18kg (4.7.3.2 4.7.3.4)Flammability test for fire enclosures of movable equipment having a total mass not exceeding 18 kg, and for material and components located inside fire enclosures (see 4.7.3.2 and 4.7.3.4)**		Pass
A.2.1	Samples, material .....:		-
	Wall thickness (mm).....:		-
A.2.2	Conditioning of samples		N/A
A.2.3	Mounting of samples		N/A
A.2.4	Test flame		N/A
A.2.5	Test procedure		N/A
A.2.6	Compliance criteria		N/A
	Sample 1 burning time (s).....:		-
	Sample 2 burning time (s).....:		-
	Sample 3 burning time (s).....:		-
A.2.7	Alternative test acc. to IEC 60695-2-2, cl. 4, 8		N/A
	Sample 1 burning time (s).....:		-
	Sample 2 burning time (s).....:		-
	Sample 3 burning time (s).....:		-

A.3	**(4.6.2)Hot flaming oil test (see 4.6.2)**		N/A
A.3.1	Mounting of samples		N/A
A.3.2	Test procedure		N/A
A.3.3	Compliance criterion		N/A

B	**Annex B, MOTOR TESTS UNDER ABNORMAL CONDITIONS(see 4.7.2.2 and 5.3.2)**		N/A
B.1	General requirements		N/A
	Position ..... :		-
	Manufacturer ..... :		-
	Type ..... :		-
	Rated values ..... :		-
B.2	Test conditions		N/A
B.3	Maximum temperatures		N/A
B.4	Running overload test		N/A
B.5	Locked-rotor overload test		N/A

	Test duration (days)..... :		-
	Electric strength test: test voltage (V)..... :		-
B.6	Running overload test for d.c. motors in secondary circuits		N/A
B.7	Locked-rotor overload test for d.c. motors in secondary circuits		N/A
B.7.1	Test procedure		N/A
B.7.2	Alternative test procedure; test time (h) :		N/A
B.7.3	Electric strength test		N/A
B.8	Test for motors with capacitors		N/A
B.9	Test for three-phase motors		N/A
B.10	Test for series motors		N/A
	Operating voltage (V) ..... :		-

C	**Annex C, TRANSFORMERS (see 1.5.4 and 5.3.3)**		N/A
	Position.....:		-
	Manufacturer .....:		-
	Type .....:		-
	Rated values .....:		-
	Method of protection .....:		-
C.1	Overload test		N/A
C.2	Insulation		N/A
	Protection from displacement of windings .....:		N/A

D	**Annex D, MEASURING INSTRUMENTS FOR TOUCH-CURRENT TESTS**		N/A
D.1	Measuring instrument		N/A
D.2	Alternative measuring instrument		N/A

E	**Annex E, TEMPERATURE RISE OF A WINDING**	N/A

F	**Annex F, MEASUREMENT OF CLEARANCES AND CREEPAGE DISTANCES (see 2.10)**	Pass

G	**Annex G, ALTERNATIVE METHOD FOR DETERMINING MINIMUM CLEARANCES**		N/A
G.1	Summary of the procedure for determining minimum clearances		N/A
G.2	Determination of mains transient voltage (V)		N/A
G.2.1	AC mains supply		N/A
G.2.2	DC mains supply		N/A
G.3	Determination of telecommunication network transient voltage (V): .:		N/A
G.4	Determination of required withstand voltage (V) .....:		N/A
G.5	Measurement of transient levels (V) .....:		N/A
G.6	Determination of minimum clearances .....:		N/A

H	**ANNEX H, IONIZING RADIATION (see 4.3.13)**	N/A

J	**Annex J, TABLE OF ELECTROCHEMICAL POTENTIALS (see 2.6.5.6)**		Pass
	Metal used.....:	Copper or copper alloy.	-

K	**ANNEX K, THERMAL CONTROLS (see 1.5.3 and 5.3.7)**		N/A
K.1	Making and breaking capacity		N/A
K.2	Thermostat reliability; operating voltage (V).....:		N/A
K.3	Thermostat endurance test; operating voltage (V).....:		N/A
K.4	Temperature limiter endurance; operating voltage (V) .....:		N/A
K.5	Thermal cut-out reliability		N/A
K.6	Stability of operation		N/A

L	**Annex L, NORMAL LOAD CONDITIONS FOR SOME TYPES OF ELECTRICAL BUSINESS EQUIPMENT (see 1.2.2.1 and 4.5.1)**		Pass
L.1	Typewriters		N/A
L.2	Adding machines and cash registers		N/A
L.3	Erasers		N/A
L.4	Pencil sharpeners		N/A

L.5	Duplicators and copy machines		N/A
L.6	Motor-operated files		N/A
L.7	Other business equipment	Operated in most unfavorable way of operation given in operating instructions until steady conditions established. See Table 4.5 for details.	Pass

M	**Annex M, CRITERIA FOR TELEPHONE RINGING SIGNALS (see 2.3.1)**		N/A
M.1	Introduction		N/A
M.2	A Method A		N/A
M.3	B Method B		N/A
M.3.1	Ringing signal		N/A
M.3.1.1	Frequency (Hz) .....:		-
M.3.1.2	Voltage (V) .....:		-
M.3.1.3	Cadence ; time (s), voltage (V).....:		-
M.3.1.4	Single fault current (mA) .....:		-
M.3.2	Tripping device and monitoring voltage.....:		N/A
M.3.2.1	Conditions for use of a tripping device or a monitoring voltage		N/A
M.3.2.2	Tripping device		N/A
M.3.2.3	Monitoring voltage (V).....:		N/A

N	**Annex N, IMPULSE TEST GENERATORS (see 2.10.3.4, 6.2.2.1, 7.3.2 and clause G.5)**		N/A
N.1	ITU- T ITU-T impulse test generators		N/A
N.2	CNS 14408 (IEC 60065) impulse test generator		N/A

P	**Annex P, NORMATIVE REFERENCES**	N/A

Q	**Annex Q, BIBLIOGRAPHY**	N/A

R	**Annex R, EXAMPLES OF REQUIREMENTS FOR QUALITY CONTROL PROGRAMMES**	N/A

R.1	(2.10.6)Minimum separation distances for unpopulated coated printed boards (see 2.10.6)		N/A
R.2	(2.10.3)Reduced clearances (see 2.10.3)		N/A

S	**Annex S, (6.2.2.3)PROCEDURE FOR IMPULSE TESTING (see 6.2.2.3)**		N/A
S.1	Test equipment		N/A
S.2	Test procedure		N/A
S.3	Examples of waveforms during impulse testing		N/A

T	**Annex T, (1.1.2)GUIDANCE ON PROTECTION AGAINST INGRESS OF WATER (see 1.1.2)**		N/A
	.....:		-

U	**Annex U, (2.10.5.4)INSULATED WINDING WIRES FOR USE WITHOUT INTERLEAVED INSULATION (see 2.10.5.4)**		N/A
	.....:	Certified triple insulated wire used. For details refer to table 1.5.1	-

1.5.1	**TABLE:**		**list of critical components**		Pass
Object/part No.	/ Manufacturer/ trademark	type/model	technical data	Marks of Conformity	Standard
External Power Adapter	Lien Electronics Inc	LE-9702B-01	I/P: 100-240Vac, 60/50Hz, 1.5A; O/P: 19Vdc, 3.16A, 60W max. LPS.	UL	UL 60950, IEC 60950
Alternate external power adapter	Various	Various	Output 19Vdc, 3.16A, 60W max. LPS.	UL	UL 60950, IEC 60950
Enclosure	Various	Various	Metal, painted, overall approximately 218 by 55 by 148 mm. thickness minimum 1.05 mm.	--	--
Liquid Crystal Display (LCD)	Various	Various	6.4 inch SVGA , TFT type	--	--
All PCBs	Various	Various	Minimum V-1, minimum 105 degree C.	UL	UL 796, IEC 60603-2
RTC Battery (BAT1)	Rayovac Corp	BR1632	Maximum abnormal Charging Current 4 mA. Reverse current protection by series circuit of diode D5 and resistor R112, rated 1k ohm.	UL	UL 1642, IEC 60950
Connectors (optional)	Various	Various	SELV. Provided with two RS-232 port; one LAN port; one VGA port; one	--	--

			USB port; one Keyboard/Mouse port.		
HDD Drive (Optional)	Various	Various	5Vdc/maximum 0.55A.	UL	UL 60950, IEC 60950
Power Switch	Various	Various	50 V, 0.5 A.	--	--
Inverter board	King core electronics Inc	HY1006	(Output evaluated as Limited Current Circuitry). The DC/AC Inverter consists of the following major components.	--	--
DC/AC Inverter Board Transformer (T1)	--	--	Open type construction. Core: Ferrite, overall 33.6 mm by 8.2 mm by 3.3 mm include bobbin. Coil: Copper magnet wire wound on bobbin. (QMFZ2), rated minimum V-2.	--	--
DC/AC Inverter Board Fuse (F1)	Cooper Industries Inc BUSSMANN DIV	3216FF	1A, 32V	UL	UL 248, IEC 60127
DC/AC Inverter Board Alternate fuse	Littelfuse Inc	451001	1A, 125V	UL	UL 248, IEC 60127

1.6.2	**TABLE: ( )electrical data (in normal conditions)**					Pass
fuse #	I rated (A)	U (V)	P (W)	I (mA)	I fuse (mA)	condition/status
--	0.8	19.01	--	860	--	Maximum Normal Load: USB port load 0.5A.
supplementary information:						
--						

2.10.3 and 2.10.4	**TABLE: clearance and creepage distance measurements**					Pass
clearance cl and creepage distance dcr at/of:	Up (V)	U r.m.s. (V)	required cl (mm)	cl (mm)	required dcr (mm)	dcr (mm)
--	--	--	--	--	--	--
supplementary information:						
Investigated in certification of external power adapter. Complies with Sub clause 5.3.4, Method c.						

2.10.5	**TABLE: distance through insulation measurements**			N/A
distance through insulation di at/of:	Up (V)	test voltage (V)	required di (mm)	di (mm)
--	--	--	--	--
supplementary information:				
Investigated in certification of external power adapter.				

4.5	**TABLE: temperature rise measurements**						Pass
	test voltage (V).....	19 Vdc	--	--	--	--	—
	t1 (°C).....	--	--	--	--	--	—
	t2 (°C).....	--	--	--	--	--	—
maximum temperature T of part/at:		T (°C)					allowed Tmax (°C)
1. L4 coil		44/67	--	--	--	--	105
2. LF1 coil		45/68	--	--	--	--	105
3. T1 coil		46/69	--	--	--	--	90
4. T1 core		45/68	--	--	--	--	90
5. Enclosure outside		36/59	--	--	--	--	90
6. T1 coil		53/76	--	--	--	--	90
7. L1 coil		59/82	--	--	--	--	105
8. L3 coil		65/88	--	--	--	--	105
9. C4 Body		54/77	--	--	--	--	85

10. PCB near U4	59/82	--	--	--	--	105
11. HS1 Body	67/90	--	--	--	--	--
12. HD Body	49/72	--	--	--	--	--
13. PCB near U6	64/87	--	--	--	--	105
14. Panel	38/61	--	--	--	--	95
15. Enclosure outside	32/55	--	--	--	--	70
16. Ambient air/Tma	27/50	--	--	--	--	--
Test duration (Time)	1 hrs 20 mins Measured under ambient/Computed per Tma	--	--	--	--	--
temperature T of winding:		R_1 (Ω)	R_2 (Ω)	T (°C)	allowed Tmax (°C)	insulation class
--		--	--	--	--	--
supplementary information:						
Tmra= 50 °C Maximum Normal Load: USB port loaded to 0.5 A. Location 1 to location 5 for power supply. Location 6 to location 15 for unit.						

4.5.2	**TABLE: ball pressure test of thermoplastics**		N/A
	allowed impression diameter (mm)..... :	<2	—
part		test temperature (°C)	impression diameter (mm)
--		--	--
supplementary information:			
Investigated in certification of external power adapter.			

4.7	**TABLE: resistance to fire**			Pass
part	manufacturer of material	type of material	thickness(mm)	flammability class
--	--	--	--	--
supplementary information:				
Investigated in certification of external power adapter. External power adapter has LPS output. All internal materials are rated minimum V-2 or are mounted on PWBs rated minimum V-1. Internal wiring is marked VW-1 or FT-1. See Table 1.5.1 for details.				

5.2	**TABLE: , electric strength tests, impulse tests and voltage surge tests**	N/A

test voltage applied between:	test voltage (V) a.c./d.c.	breakdown Yes / No
--	--	--
supplementary information:		
Investigated in certification of external power adapter.		

5.3	**TABLE: fault condition tests**						Pass
	ambient temperature (°C) ..... :				25		—
	model/type of power supply..... :				LE-9702B-01		—
	manufacturer of power supply ..... :				Lien Electronics Inc.		—
	rated markings of power supply ..... :				I/P: 100-240Vac, 60/50Hz, 1.5A; O/P: 19Vdc, 3.16A, maximum 60W, LPS		—
component No.	fault	test voltage (V)	test time	fuse No.	fuse current (A)	result	
Unit	Blocked opening	19	1 hr 20 mins	--	--	Temp. was stable, T1 coil (External Power supply) = 54 degree C, T1 coil (for DC/AC Inverter Board) = 53 degree C, NC, NT.	
supplementary information:							
Results Key: NC = Cheese cloth remained intact NT = Tissue paper remained intact							

Enclosure

Measuring and Test Instruments

(Total 4 Pages including this Cover Page)

鼎安科技股份有限公司
SUPERIOR PRODUCT CONSULTING, INC.

文件編號:	QE19-L24		
發行版次:	04B	修正日期:	11-12-2004

File E_____ Project_____ SPC PROJECT NO 41060 Page ____of____

Measuring and Test Instruments

Applied For Safety Inspection

company/Test Institute: Superior Product Consulting, Inc

Address of Test Site: 3Fl.,No. 10, Alley 6 Lane 235 Pao Chiao Road, Hsin Tien City Taipei, Taiwan, R.O.C.

Person responsible for

Maintenance & Calibration : Terry wang/ Team Leader

Division/Department : Test Lab.

Date and Signature : TERRY WANG/ Terry Wang **Reviewer:** ALLEN HUANG/

Item	Kind of Instrument Precision Class SPC Property No.	Manufacturer	Model Serial No.	Range Used &Function	Calibrated until
1	AC Power Meter	YOKOGAWA	2433	20A	22 JUN. 2005
	SPC029		68LD0039	600V	23, JUN. 2004
2	AC Power Meter	YOKOGAWA	2433	20A	22, JUN. 2005
	SPC009		61LD0248	600V	23, JUN. 2004
4	LEAKAGE CURRENT METER	SIMPSON	228	0-100mA	13, APR. 2005
	SPC103		20433		14, APR. 2004
5	PUSH/PULL SCALE	IMADA	FB-30	30KG	23, JUN. 2005
	SPC004		207330		24, JUN. 2004
8	DC ELECTRONIC LOAD	PRODIGIT	3301A	60V/60A	04, MAR. 2005
	SPC069		80201A011		05, MAR. 2004
9	CALIPER	MITUTOYO	500-321	150mm	09, FEB. 2005
	SPC019		7217225		10, FEB. 2004
12	TEMP. RECORDER	YOKOGAWA	UR180	-200℃ TO	13, JUN. 2005
	SPC033		42YS0028	400℃	14, JUN. 2004
13	TEMP. RECORDER	FLUKE	52	-200℃ TO	29, JUL. 2005
	SPC099		4795005	760℃	30, JUL. 2004
14	DIGITIZING OSCILLOSCOPE	TEKTRONIX	TDS410	150MHz	08, JAN. 2005
	SPC047		B010359	100MS/s	08, JAN. 2004
15	DUAL DISPLAY MULTIMETER	FLUKE	45	750Vac	09, FEB. 2005
	SPC018		5120082	10A	10, FEB. 2004
16	HIGH VOLTAGE PROBE	FLUKE	80K-40	40KVpk	22, SEP. 2005
	SPC104		72940016		23, SEP. 2004
17	THERMO-HYGROMETER	ISUZU	3-3122	-15℃- +40℃	22, JUN. 2005
	SPC067		80660571	0-100% RH	23, JUN. 2004
18	DC ELECTRONIC LOAD	PRODIGIT	3301	60V/60A	30, APR. 2005
	SPC028		205010035	250V/10A	01, MAY. 2004
19	DC ELECTRONIC LOAD	PRODIGIT	3301	60V/60A	30, APR. 2005
	SPC035		210010074	250V/10A	01, MAY. 2004
21	DC ELECTRONIC LOAD	PRODIGIT	3321	60V/60A	06, AUG. 2005
	SPC057		607020098		07, AUG. 2004
22	DC ELECTRONIC LOAD	PRODIGIT	3321	60V/60A	28, JUL. 2005
	SPC089		607020097		29, JUL. 2004
23	DIGITIZING POWER METER	PRODIGIT	4011	600V/20A	25, JUL. 2005
	SPC059		964011133		26, JUL. 2004
24	STOP WATCH	CASIO	HS-3	0 S-10HOURS	16, SEP. 2005
	SPC068		209Q05		17, SEP. 2004
25	DIGITIZING MUTIMETER	GOOD WILL	GDM-8055	750Vac	22, JUN. 2005
	SPC060		6040254	2A 20MΩ	23, JUN. 2004

Note: 儀器送校驗前請先確認「**QE01-L02** 供應商評估紀錄表」是否有此供應商評估紀錄，並確認符合需求，若無則進行供應商評估動作.

File E_____ Project_____ SPC PROJECT NO 41060 Page ____of____

Item	Kind of Instrument Precision Class SPC Property No.	Manufacturer	Model Serial No	Range Used &Function	Calibrated until
27	POWER ANALYSER	AVPOWER	PA2100	650Vrms	13, APR. 2005
	SPC063		621-0597	20A	14, APR. 2004
28	DC ELECTRONIC LOAD	PRODIGIT	3301A	60V/60A	25, AUG. 2005
	SPC066		70601A022	250V/10A	26, AUG. 2004
29	TEST FINGER	UL	SM471	UL60950-1	21, MAR. 2008
	SPC039		S002	FIG. 19	22, MAR. 2004
30	BALL PRESSURE	UL	S1598	UL60950-1	21, MAR. 2008
	SPC041		S004	FIG. 21	22, MAR. 2004
31	IMPACT BALL	UL	----	50mm	21, MAR. 2008
	----		S003	500g	22, MAR. 2004
32	TEST PIN	UL	S2962	UL60950-1	21, MAR. 2008
	SPC040		S001	FIG. 20	22, MAR. 2004
33	DC ELECTRONIC LOAD	PRODIGIT	3301A	60V/60A	25, AUG. 2005
	SPC077		80701A043		26, AUG. 2004
34	DC ELECTRONIC LOAD	PRODIGIT	3301A	60V/60A	27, AUG. 2005
	SPC079		80701A042		28, AUG. 2004
35	DC ELECTRONIC LOAD	PRODIGIT	3302A	60V/30A	06, AUG. 2005
	SPC080		808020375		07, AUG. 2004
36	DC ELECTRONIC LOAD	PRODIGIT	3302	60V/30A	06, AUG. 2005
	SPC081		808020378		07, AUG. 2004
37	DC ELECTRONIC LOAD	ZENTECH	2600R	60V/60A	27, AUG. 2005
	SPC078		809055	300V/10A	28, AUG. 2004
38	TEMP. RECORDER	YOKOGAWA	UR1800	-200℃ TO	11, FEB. 2005
	SPC082		4370GE038	400	12, FEB. 2004
39	TEMP. RECORDER	YOKOGAWA	UR1800	-200℃ TO	08, JAN. 2005
	SPC083		4370GE037	400	08, JAN. 2004
40	TEMP. RECORDER	YOKOGAWA	UR1800	-200℃ TO	08, JAN. 2005
	SPC090		4370GE046	400	08, JAN. 2004
41	DC ELECTRONIC LOAD	PRODIGIT	3302A	60V/30A	06, OCT. 2005
	SPC091		811020578		07, OCT. 2004
42	DC ELECTRONIC LOAD	PRODIGIT	3302A	60V/30A	06, OCT. 2005
	SPC088		811020580		07, OCT. 2004
43	DC ELECTRONIC LOAD	PRODIGIT	3301A	60V/60A	10, NOV. 2005
*	SPC098		80901A045		11, NOV. 2004
44	TEST FINGER	UL	FIGURE 19	UL60950-1	21, MAR. 2008
	SPC070		2346	FIG. 19	22, MAR. 2004
45	DC ELECTRONIC LOAD	PRODIGIT	3301A	60V/60A	06, OCT. 2005
	SPC092		80901A046		07, OCT. 2004
46	DIGITIZING OSCILLOSCOPE	TEKTRONIX	TDS360	200MHz	27, AUG. 2005
	SPC093		B019983	1GS/s	28, AUG. 2004
47	DUAL DISPLAY MULTIMETER	FLUKE	45	750Vac	08, JAN. 2005
	SPC094		7079032	10A	08, JAN. 2004
48	HI-POT TESTER	ZENTECH	ZT9072A	10mA	01, JUL. 2005
	SPC095		809549	5KV	30, JUN. 2004
49	GROUNDING TESTER	ZENTECH	ZT9570	12V	27, NOV. 2004
	SPC096		807786	40A	28, NOV. 2003
50	LEAKAGE CURRENT METER	SIMPSON	228	0-100mA	07, OCT. 2005
	SPC097		20988		08, OCT. 2004
51	DIGITIZING POWER METER	PRODIGIT	4011	600V/20A	10, FEB. 2005
	SPC094		984011034		11, FEB. 2004
52	CALIPER	MITUTOYO	CD-6"CS	150mm	05, NOV. 2005
*	SPC084		0305386		06, NOV. 2004
53	TEMP. RECORDER	YOKOGAWA	UR1800	-200℃ TO	10, NOV. 2005
*	SPC072		4370GC179	400	11, NOV. 2004

Note: 儀器送校驗前請先確認「**QE01-L02** 供應商評估紀錄表」是否有此供應商評估紀錄，並確認符合需求，若無則進行供應商評估動作.

File E_____ **Project**_____ **SPC PROJECT NO** 41060 **Page** ____ **of** ____

Item	Kind of Instrument Precision Class SPC Property No.	Manufacturer	Model Serial No.	Range Used &Function	Calibrated until
54	AC POWER METER	YOKOGAWA	2433	20A	08, JAN. 2005
	SPC101		68LD0040	600V	08, JAN. 2004
56	TEMP. RECORDER	YOKOGAWA	UR1800	-200℃ TO	11, FEB. 2005
	SPC104		12W732059	400	12, FEB. 2004
57	TEMP. RECORDER	FLUKE	52	-200℃ TO	04, MAR. 2005
	SPC106		73990047	760℃	05, MAR. 2004
58	DIGITIZING POWER METER	CHYNG HONG	CP-350	500V/50A	05, MAR. 2005
	SPC107		355952		06, MAR. 2004
59	DIGITIZING POWER METER	CHYNG HONG	CP-350	500V/50A	05, MAR. 2005
	SPC105		355953		06, MAR. 2004
60 *	TEMP./HUMIDITY CHAMBER	KAO TIEH	KT-7005-A	25°C to 40°C	20, OCT. 2005
	SPC005		72867	93%R.H. to 95%R.H.	21, OCT. 2004
61	DC ELECTRONIC LOAD	PRODIGIT	3301A-01	60V/60A	21, DEC. 2004
	SPC111		30901A025		22, DEC. 2003
62	TEMP. RECORDER	YOKOGAWA	DA100-23-1D	-200℃ TO	20, JAN. 2005
	SPC112		27D125487	400	21, JAN. 2004
63	TNV TEST PRODE	D.M.S	TTP	UL60950-1	03, JUN. 2008
	SPC113		63	FIG.2B	04, JUN. 2004
64	ROD PRESSURE	D.M.S	------	UL1310	03, JUN. 2008
	SPC114		64		04, JUN. 2004
65	TOUCH CURREN TEST BOARD	SPC	----	UL60065	19, DEC. 2004
	------		65	ANNEX D	20, JUN. 2004
66	L.C.C. TEST BOX	QTECH	950-2K-95009	UL60950-1	27, DEC. 2004
	------		66	CLAUSE2.4	28, JUN. 2004
67	L.C.C. TEST BOARD	SPC	----	UL60950-1	27, DEC. 2004
	------		67	CLAUSE2.4	28, JUN. 2004

Note: 儀器送校驗前請先確認「**QE01-L02** 供應商評估紀錄表」是否有此供應商評估紀錄，並確認符合需求，若無則進行供應商評估動作.

Enclosure

Schematic & PCB Layout

/ &

(Total 21 Pages including this Cover Page)

Description
1. Schematic of main board
2. Schematic of inverter
3. Layout of inverter

PCM-9373 Revision History

PCM-9373 REV.A1 01-1 Date: 2002/12/17

1.PCB version: A1 01-1 P/N: 1906937300

PCM-9373 REV.A1 02-1 Date: 2003/4/

1.PCB version: A1 02-1 P/N: 1906937301
2.Modify the circuit of power sequence.
3.Load capcitances of 25MHz crystal change from 27pF to 15 pF.
4.Change pull high resistances of floppy from 150 to 1K ohm.
5.Replace R275(75 ohm),C387(22pF),C385(180pF) and C386(180pF) as a result of mechanical issue.
6.Replace C29 as a result of mechanicl issue of heat sink.
7.Swap LED1 Pin3 and Pin4, Pin1 and Pin2.

PCB1
PCB
1906937301

Title	History Page	
Size B	Document Number PCM-9373 REV.A1 02-1	Rev A1
Date: Wednesday, July 30, 2003	Sheet 1 of 18	

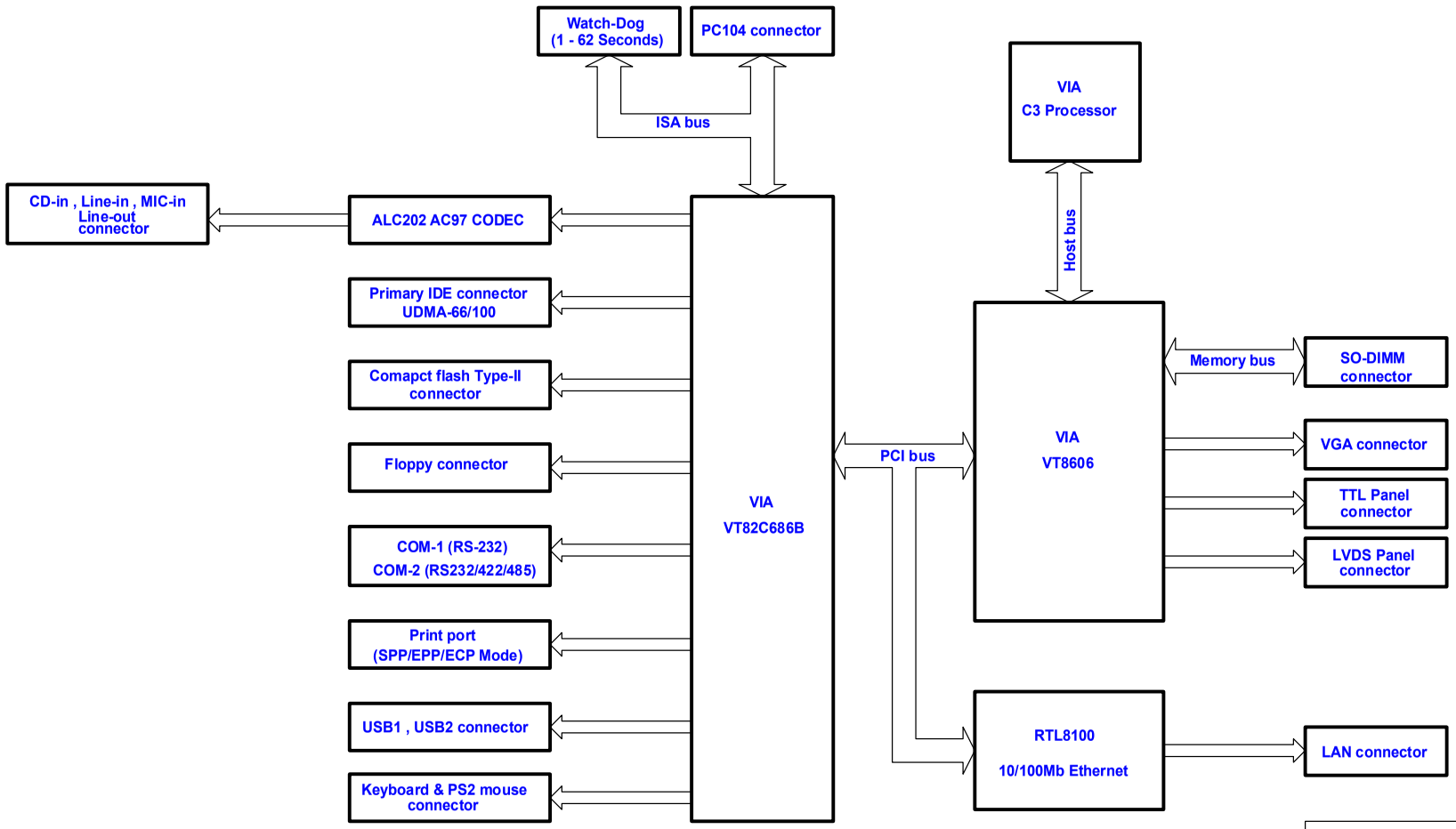

Title	Block Diagram	
Size B	Document Number PCM-9373 REV.A1 02-1	Rev A1
Date: Wednesday, July 30, 2003	Sheet 2 of 18	

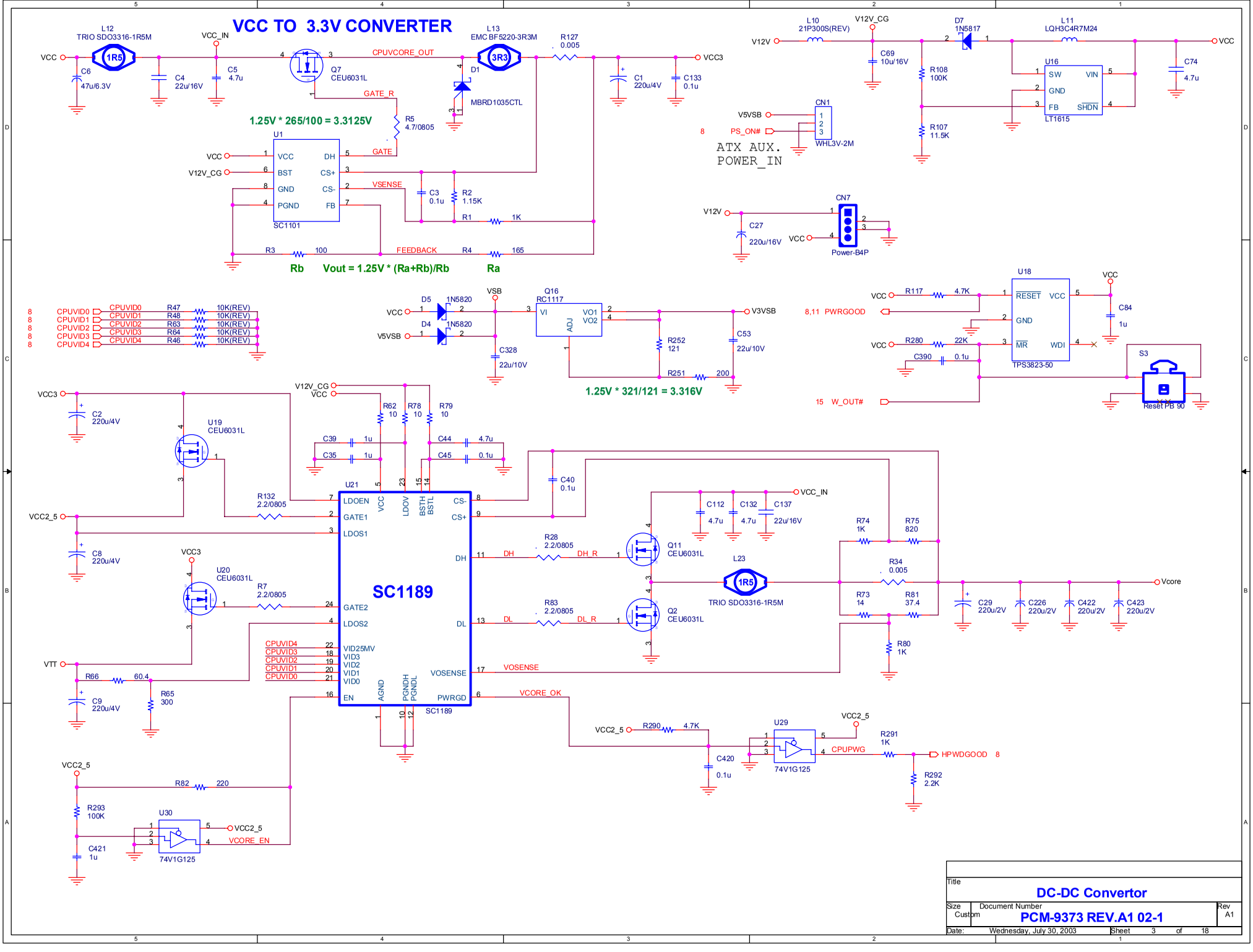
VCC TO 3.3V CONVERTER
L12
TRIO SDO3316-1R5M
VCC_IN
CPUVCORE_OUT
L13
EMC BF5220-3R3M
R127
0.005
VCC3
C6
47u/6.3V
C4
22u/16V
C5
4.7u
Q7
CEU6031L
D1
MBRD1035CTL
C1
220u/4V
C133
0.1u
GATE_R
R5
4.7/0805
1.25V * 265/100 = 3.3125V
U1
SC1101
VCC
BST
GND
PGND
DH
CS+
CS-
FB
GATE
VSENSE
C3
0.1u
R2
1.15K
R1
1K
R3
100
FEEDBACK
R4
165
Rb
Vout = 1.25V * (Ra+Rb)/Rb
Ra
V12V_CG
L10
21P300S(REV)
V12V
C69
10u/16V
D7
1N5817
L11
LQH3C4R7M24
C74
4.7u
U16
LT1615
SW
GND
FB
VIN
SHDN
R108
100K
R107
11.5K
CN1
WHL3V-2M
V5VSB
PS_ON#
ATX AUX.
POWER_IN
CN7
Power-B4P
C27
220u/16V
CPUVID0
CPUVID1
CPUVID2
CPUVID3
CPUVID4
R47
R48
R63
R64
R46
10K(REV)
D5
D4
1N5820
VSB
C328
22u/10V
Q16
RC1117
VI
VO1
VO2
ADJ
R252
121
R251
200
C53
22u/10V
V3VSB
1.25V * 321/121 = 3.316V
U18
TPS3823-50
RESET
MR
WDI
R117
4.7K
R280
22K
C390
0.1u
C84
1u
8,11 PWRGOOD
15 W_OUT#
S3
Reset PB 90
VCC2_5
C2
220u/4V
U19
CEU6031L
R62
10
R78
10
R79
10
C39
1u
C35
1u
C44
4.7u
C45
0.1u
C40
0.1u
U21
SC1189
LDOEN
GATE1
LDOS1
GATE2
LDOS2
VID25MV
VID3
VID2
VID1
VID0
EN
AGND
PGNDH
PGNDL
PWRGD
VOSENSE
DH
DL
CS-
CS+
LDOV
BSTH
BSTL
R132
2.2/0805
C8
220u/4V
U20
CEU6031L
R7
2.2/0805
VTT
R66
60.4
R65
300
C9
220u/4V
R28
2.2/0805
DH_R
R83
2.2/0805
DL_R
Q11
CEU6031L
Q2
CEU6031L
C112
4.7u
C132
4.7u
C137
22u/16V
L23
TRIO SDO3316-1R5M
R74
1K
R75
820
R34
0.005
R73
14
R81
37.4
R80
1K
C29
220u/2V
C226
220u/2V
C422
220u/2V
C423
220u/2V
Vcore
VCORE_OK
R290
4.7K
C420
0.1u
U29
74V1G125
CPUPWG
R291
1K
R292
2.2K
HPWDGOOD
R82
220
R293
100K
C421
1u
U30
74V1G125
VCORE_EN
Title
DC-DC Convertor
Size
Custom
Document Number
PCM-9373 REV.A1 02-1
Rev
A1
Date:
Wednesday, July 30, 2003
Sheet
3
of
18

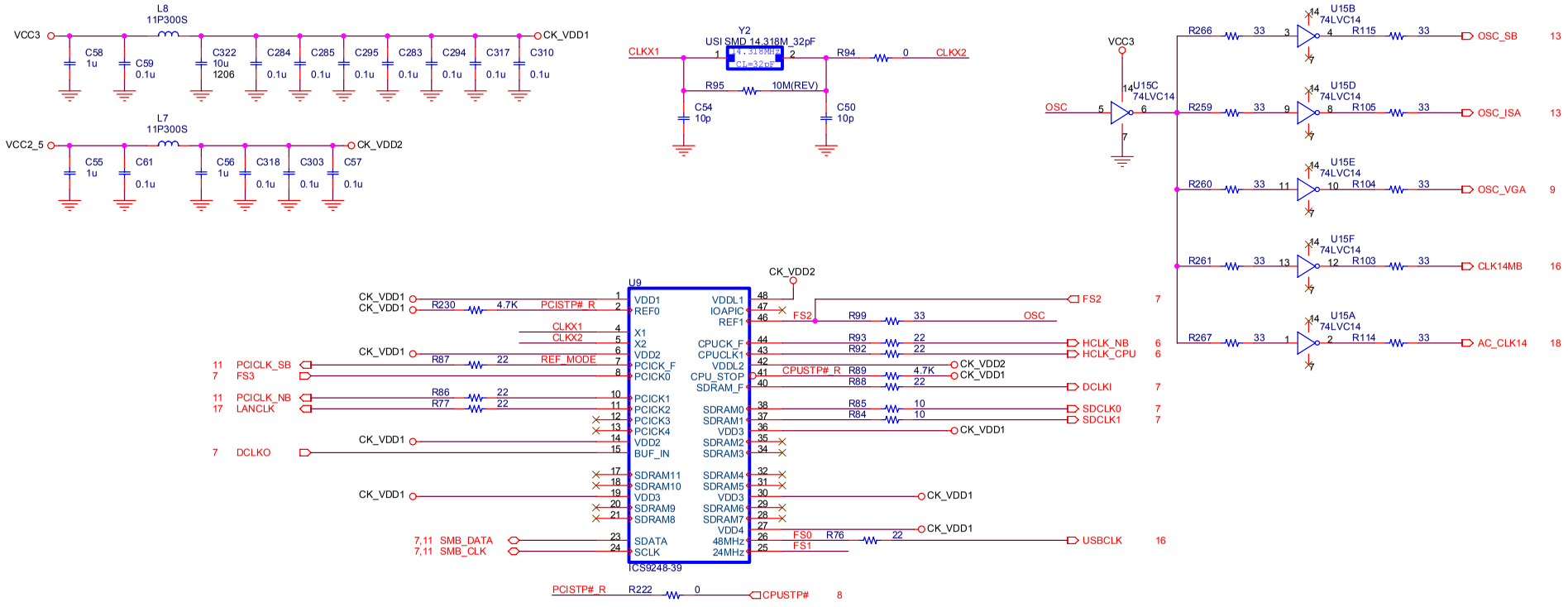

REF_MODE R212 4.7K

Pin7 Pull-low , Pin2 change mode to PCISTP# Input.

FS0 R71 4.7K
FS1 R70 4.7K
CK_VDD1

HCLK_NB	C52	10p
HCLK_CPU	C51	10p
DCLKO	C42	10p
SDCLK0	C47	10p
SDCLK1	C46	10p
USBCLK	C41	10p
PCICLK_NB	C48	10p
PCICLK_SB	C49	10p
LANCLK	C43	10p

FS3	FS2	CPU Frequency	PCI Frequency
0	0	66.80MHz	33.40MHz
0	1	100.30MHz	33.43MHz
1	1	133.00MHz	33.30MHz

Title: **Clock Generator**

Size: B | Document Number: **PCM-9373 REV.A1 02-1** | Rev: A1

Date: Wednesday, July 30, 2003 | Sheet 4 of 18

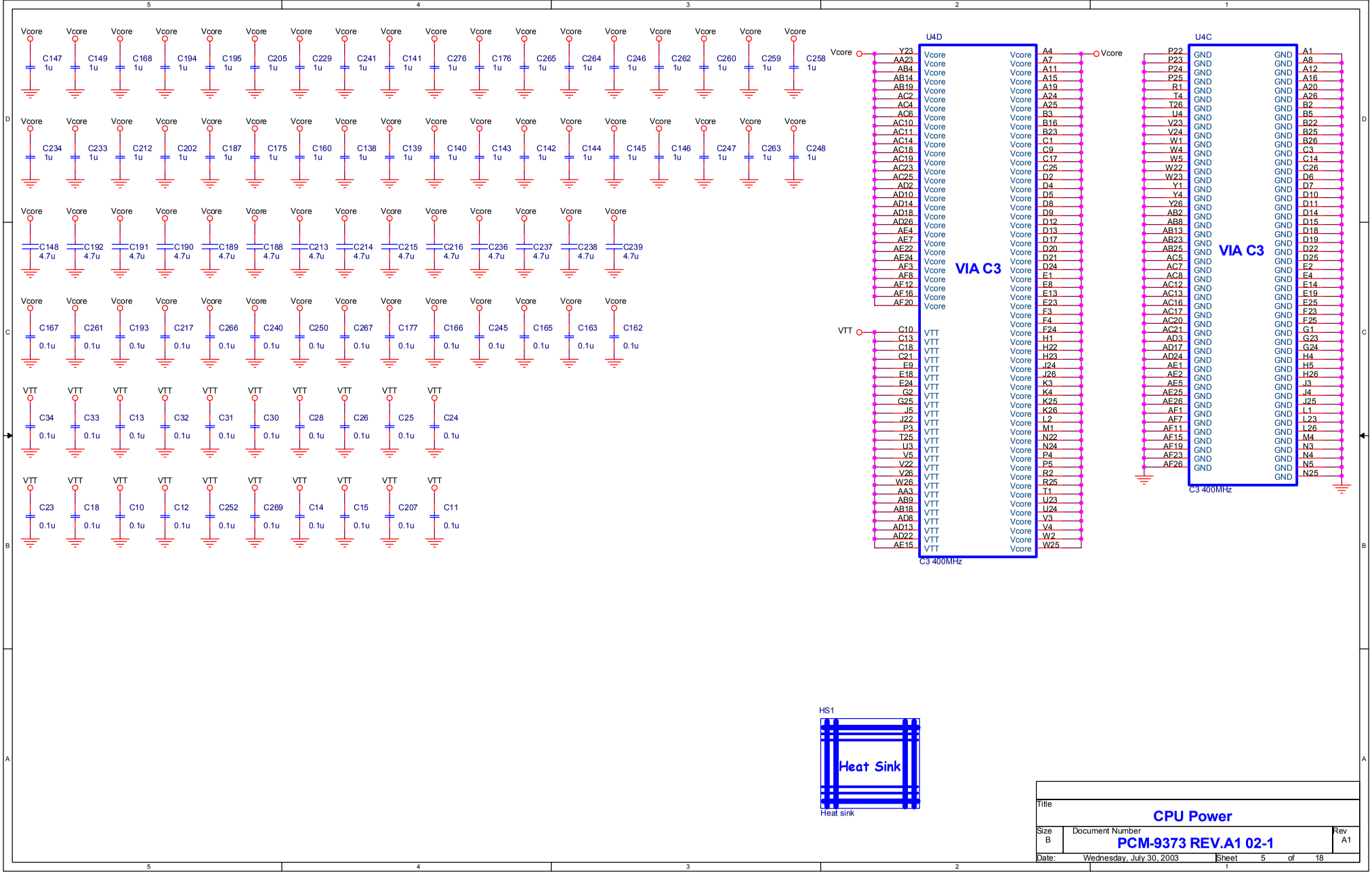
Vcore
C147 1u
C149 1u
C168 1u
C194 1u
C195 1u
C205 1u
C229 1u
C241 1u
C141 1u
C276 1u
C176 1u
C265 1u
C264 1u
C246 1u
C262 1u
C260 1u
C259 1u
C258 1u
C234 1u
C233 1u
C212 1u
C202 1u
C187 1u
C175 1u
C160 1u
C138 1u
C139 1u
C140 1u
C143 1u
C142 1u
C144 1u
C145 1u
C146 1u
C247 1u
C263 1u
C248 1u
C148 4.7u
C192 4.7u
C191 4.7u
C190 4.7u
C189 4.7u
C188 4.7u
C213 4.7u
C214 4.7u
C215 4.7u
C216 4.7u
C236 4.7u
C237 4.7u
C238 4.7u
C239 4.7u
C167 0.1u
C261 0.1u
C193 0.1u
C217 0.1u
C266 0.1u
C240 0.1u
C250 0.1u
C267 0.1u
C177 0.1u
C166 0.1u
C245 0.1u
C165 0.1u
C163 0.1u
C162 0.1u
VTT
C34 0.1u
C33 0.1u
C13 0.1u
C32 0.1u
C31 0.1u
C30 0.1u
C28 0.1u
C26 0.1u
C25 0.1u
C24 0.1u
C23 0.1u
C18 0.1u
C10 0.1u
C12 0.1u
C252 0.1u
C269 0.1u
C14 0.1u
C15 0.1u
C207 0.1u
C11 0.1u
U4D
VIA C3
C3 400MHz
U4C
VIA C3
C3 400MHz
GND
HS1
Heat Sink
Heat sink
Title
CPU Power
Size
B
Document Number
PCM-9373 REV.A1 02-1
Rev
A1
Date: Wednesday, July 30, 2003
Sheet 5 of 18

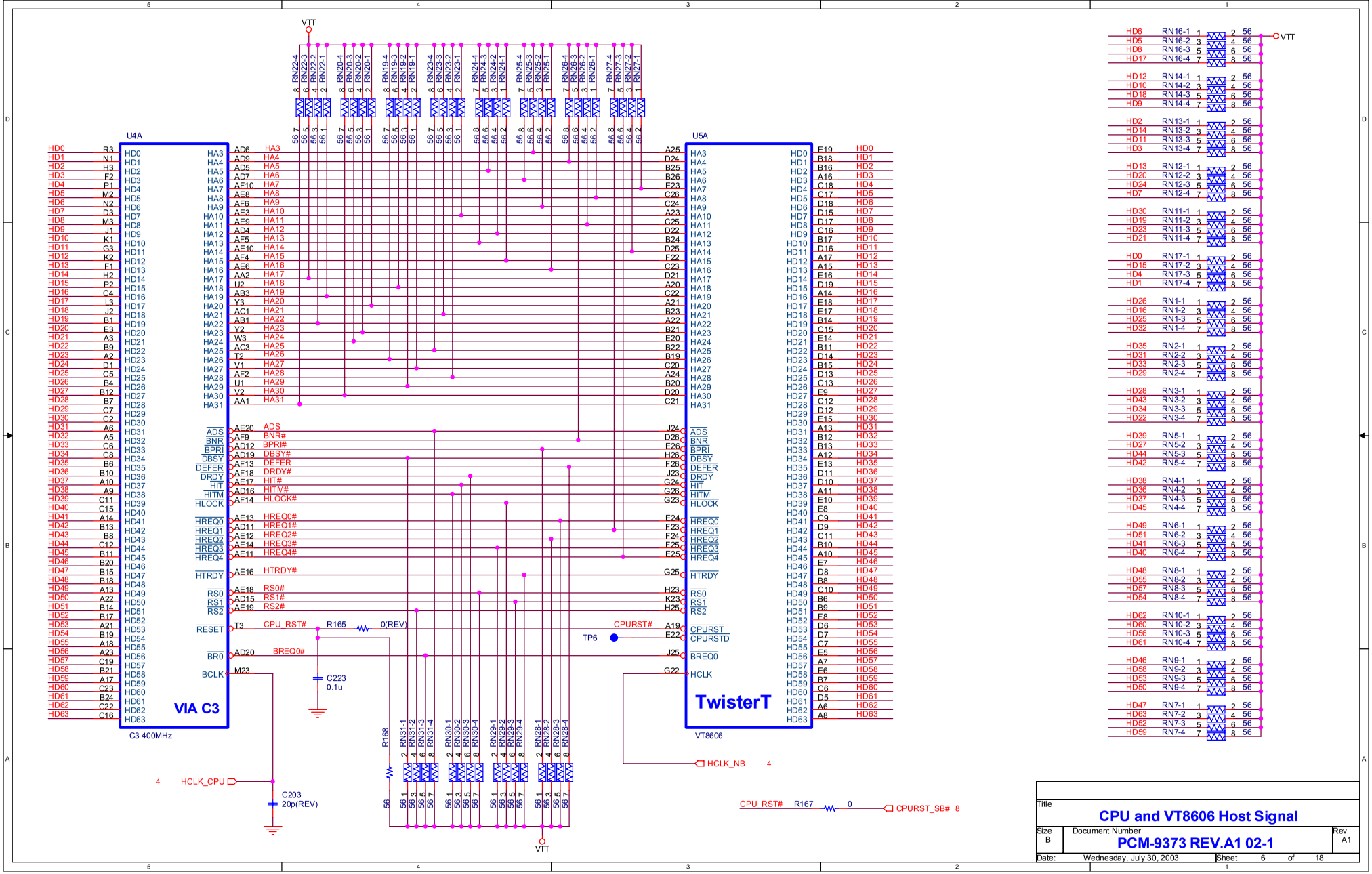

Title

CPU and VT8606 Host Signal

Size	Document Number	Rev
B	PCM-9373 REV.A1 02-1	A1

Date: Wednesday, July 30, 2003 Sheet 6 of 18

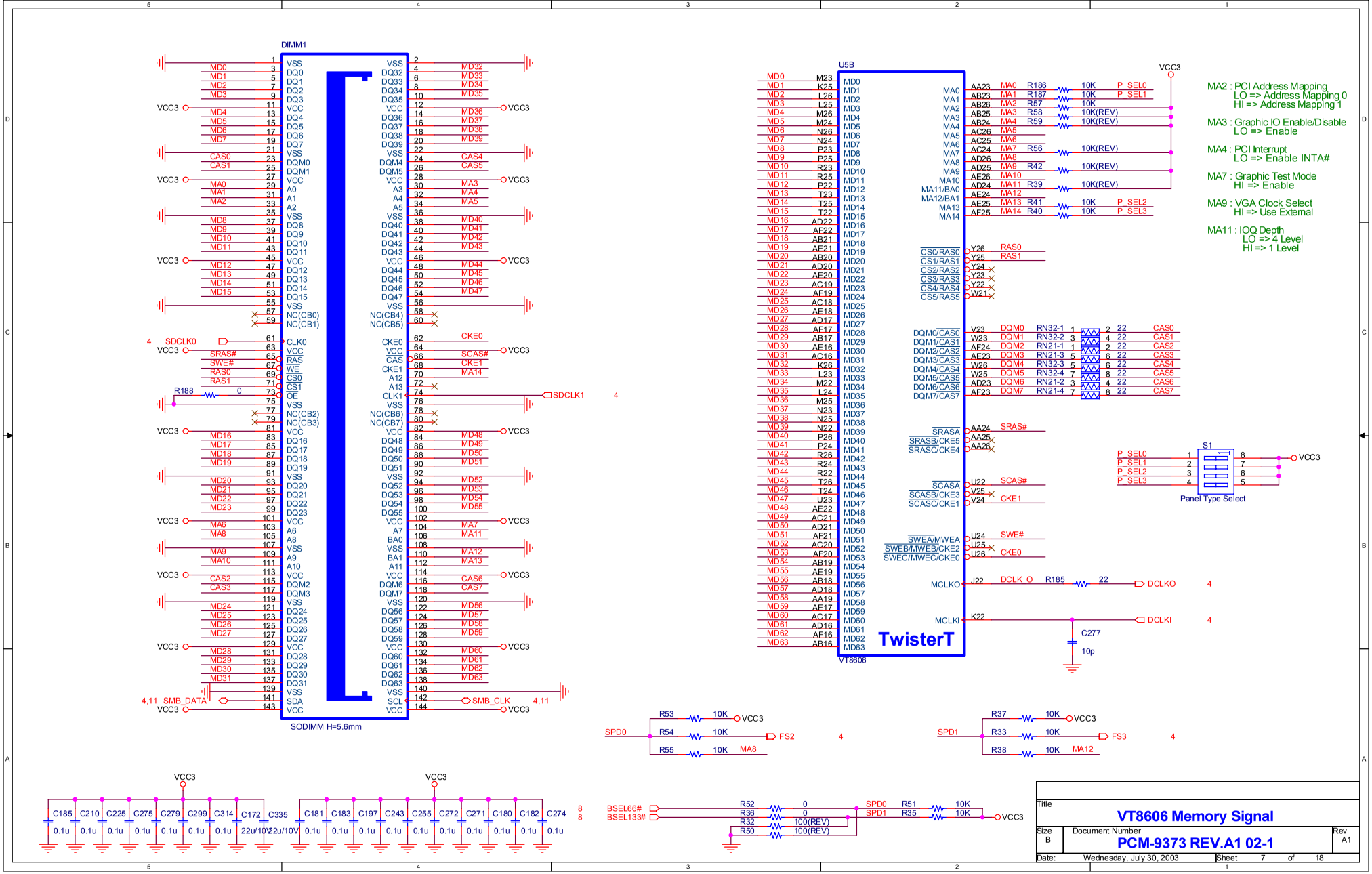
DIMM1
SODIMM H=5.6mm
U5B
TwisterT
VT8606
MA2 : PCI Address Mapping
LO => Address Mapping 0
HI => Address Mapping 1
MA3 : Graphic IO Enable/Disable
LO => Enable
MA4 : PCI Interrupt
LO => Enable INTA#
MA7 : Graphic Test Mode
HI => Enable
MA9 : VGA Clock Select
HI => Use External
MA11 : IOQ Depth
LO => 4 Level
HI => 1 Level
S1
Panel Type Select
Title
VT8606 Memory Signal
Size
B
Document Number
PCM-9373 REV.A1 02-1
Rev
A1
Date: Wednesday, July 30, 2003
Sheet 7 of 18

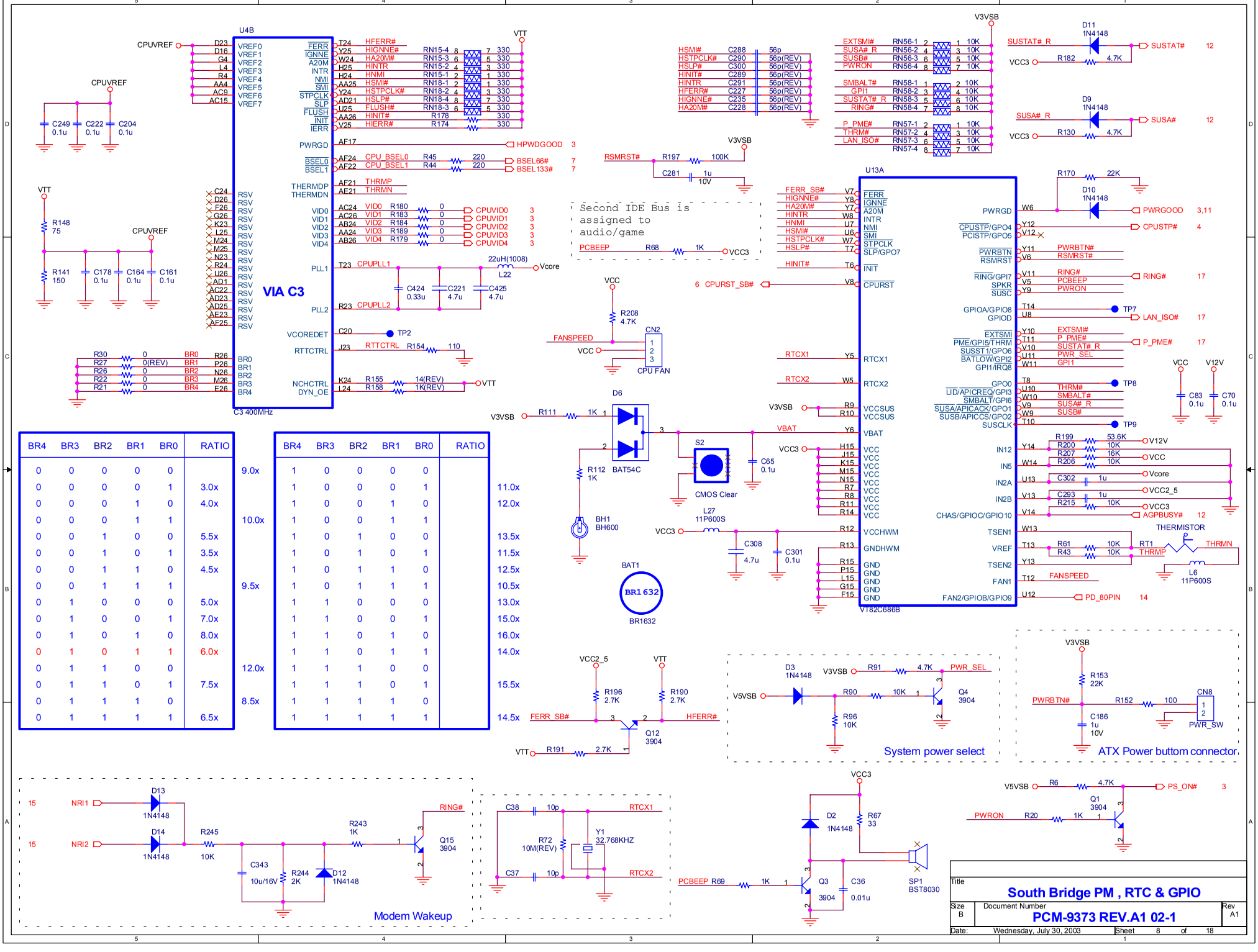

BR4	BR3	BR2	BR1	BR0	RATIO
0	0	0	0	0	
0	0	0	0	1	3.0x
0	0	0	1	0	4.0x
0	0	0	1	1	
0	0	1	0	0	5.5x
0	0	1	0	1	3.5x
0	0	1	1	0	4.5x
0	0	1	1	1	
0	1	0	0	0	5.0x
0	1	0	0	1	7.0x
0	1	0	1	0	8.0x
0	1	0	1	1	6.0x
0	1	1	0	0	
0	1	1	0	1	7.5x
0	1	1	1	0	
0	1	1	1	1	6.5x

	BR4	BR3	BR2	BR1	BR0	RATIO
9.0x						
	1	0	0	0	0	
11.0x	1	0	0	0	1	
12.0x	1	0	0	1	0	
10.0x	1	0	0	1	1	
13.5x	1	0	1	0	0	
11.5x	1	0	1	0	1	
12.5x	1	0	1	1	0	
9.5x	1	0	1	1	1	
13.0x	1	1	0	0	0	
15.0x	1	1	0	0	1	
16.0x	1	1	0	1	0	
14.0x	1	1	0	1	1	
12.0x	1	1	1	0	0	
15.5x	1	1	1	0	1	
8.5x	1	1	1	1	0	
14.5x	1	1	1	1	1	

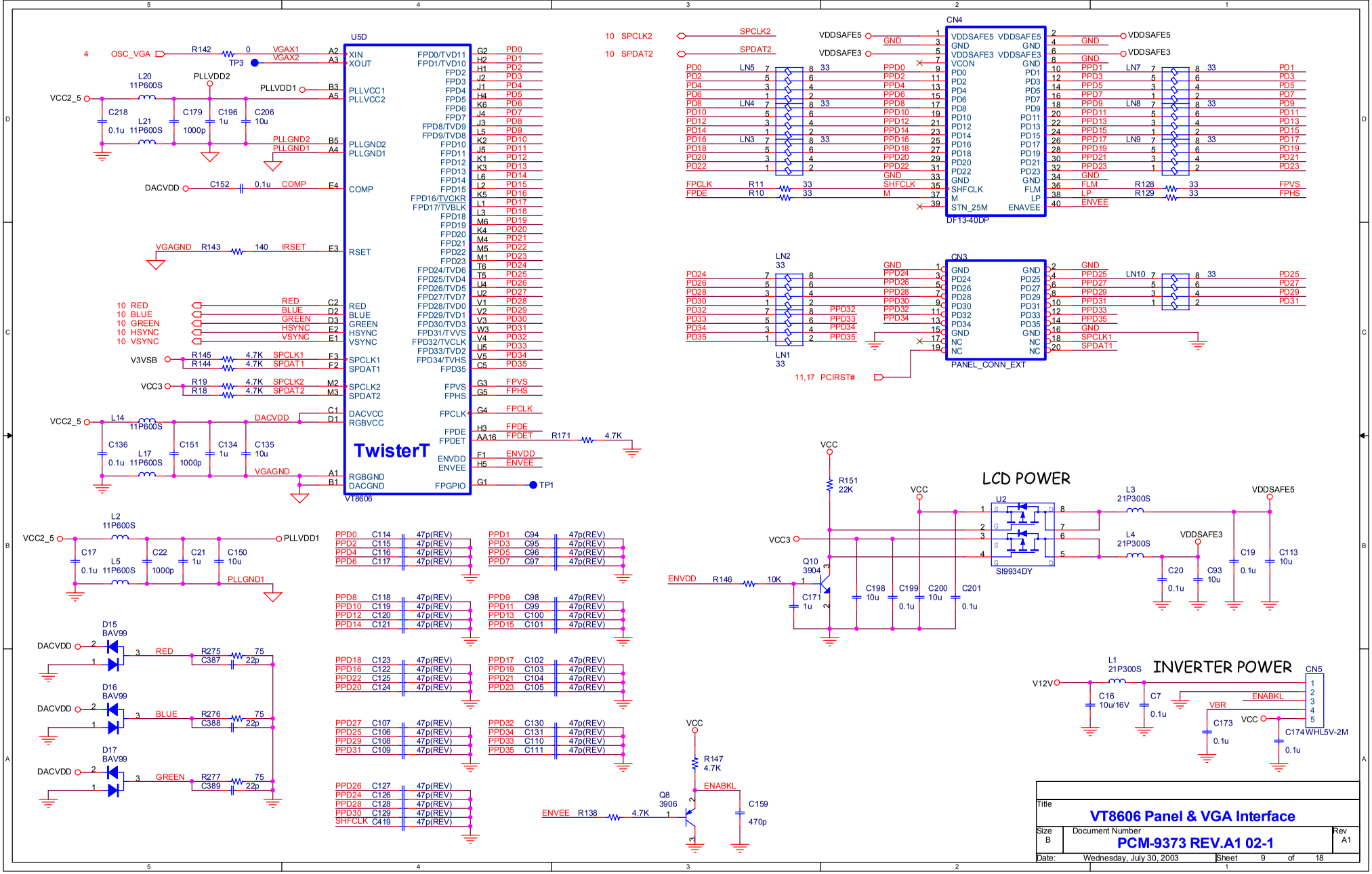
U5D
TwisterT
VT8606
CN4
DF13-40DP
CN3
PANEL_CONN_EXT
LN1
LN2
LN4
LN5
LN7
LN8
LN9
LN10
LCD POWER
U2
SI9934DY
Q10
3904
Q8
3906
INVERTER POWER
CN5
WHL5V-2M
Title
VT8606 Panel & VGA Interface
Size
B
Document Number
PCM-9373 REV.A1 02-1
Rev
A1
Date:
Wednesday, July 30, 2003
Sheet
9
of
18

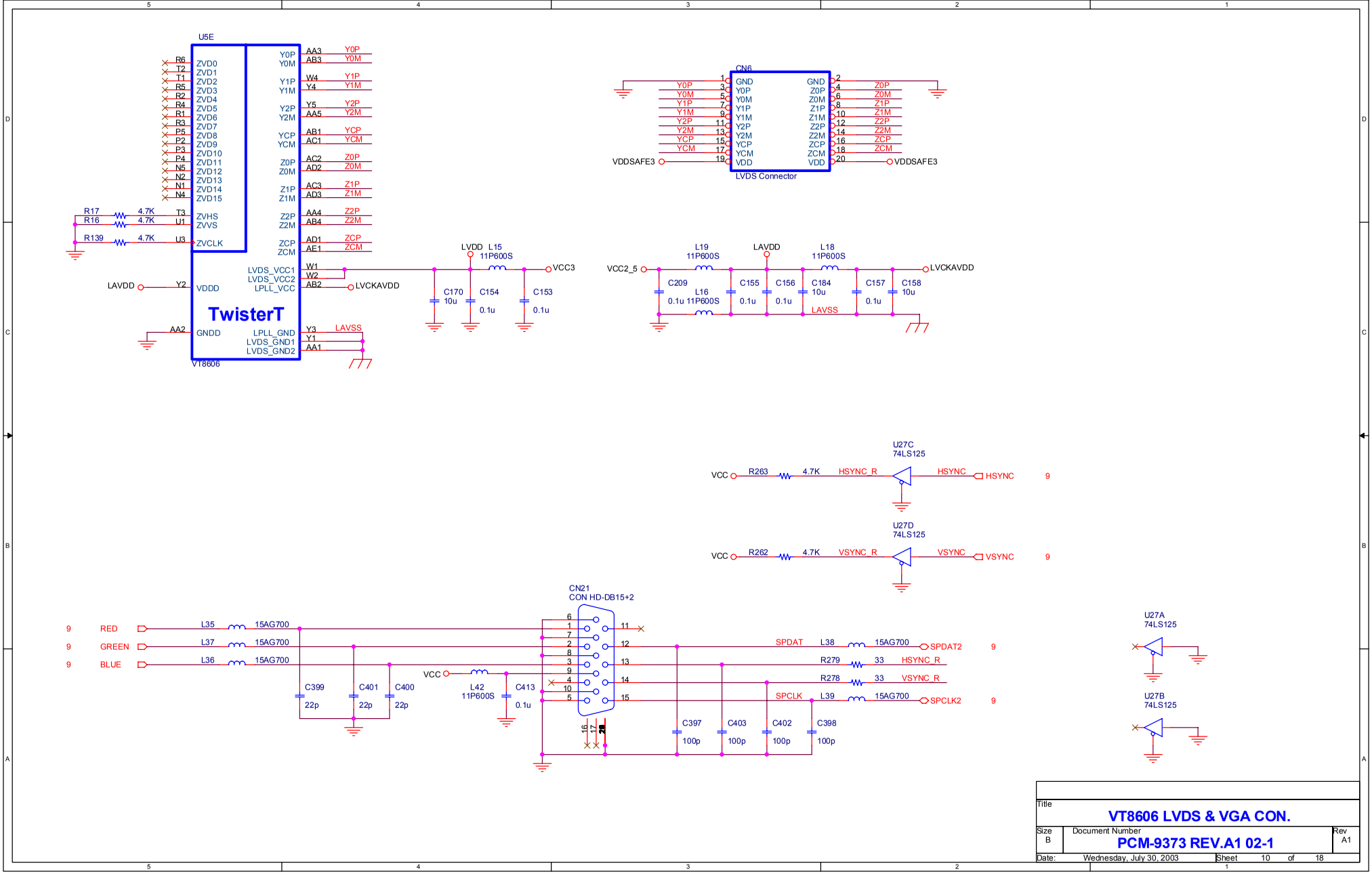
U5E
TwisterT
VT8606
ZVD0
ZVD1
ZVD2
ZVD3
ZVD4
ZVD5
ZVD6
ZVD7
ZVD8
ZVD9
ZVD10
ZVD11
ZVD12
ZVD13
ZVD14
ZVD15
ZVHS
ZVVS
ZVCLK
VDDD
GNDD
Y0P
Y0M
Y1P
Y1M
Y2P
Y2M
YCP
YCM
Z0P
Z0M
Z1P
Z1M
Z2P
Z2M
ZCP
ZCM
LVDS_VCC1
LVDS_VCC2
LPLL_VCC
LPLL_GND
LVDS_GND1
LVDS_GND2
LAVDD
LVCKAVDD
LAVSS
R17 4.7K
R16 4.7K
R139 4.7K
CN6
LVDS Connector
GND
VDD
VDDSAFE3
L15 11P600S
L19 11P600S
L18 11P600S
L16 11P600S
VCC3
VCC2_5
LVDD
C170 10u
C154 0.1u
C153 0.1u
C209 0.1u
C155 0.1u
C156 0.1u
C184 10u
C157 0.1u
C158 10u
U27C 74LS125
U27D 74LS125
U27A 74LS125
U27B 74LS125
VCC
R263 4.7K
R262 4.7K
HSYNC_R
VSYNC_R
HSYNC
VSYNC
CN21 CON HD-DB15+2
RED
GREEN
BLUE
L35 15AG700
L37 15AG700
L36 15AG700
C399 22p
C401 22p
C400 22p
L42 11P600S
C413 0.1u
SPDAT
SPCLK
L38 15AG700
L39 15AG700
SPDAT2
SPCLK2
R279 33
R278 33
C397 100p
C403 100p
C402 100p
C398 100p
Title
VT8606 LVDS & VGA CON.
Size B
Document Number
PCM-9373 REV.A1 02-1
Rev A1
Date: Wednesday, July 30, 2003
Sheet 10 of 18

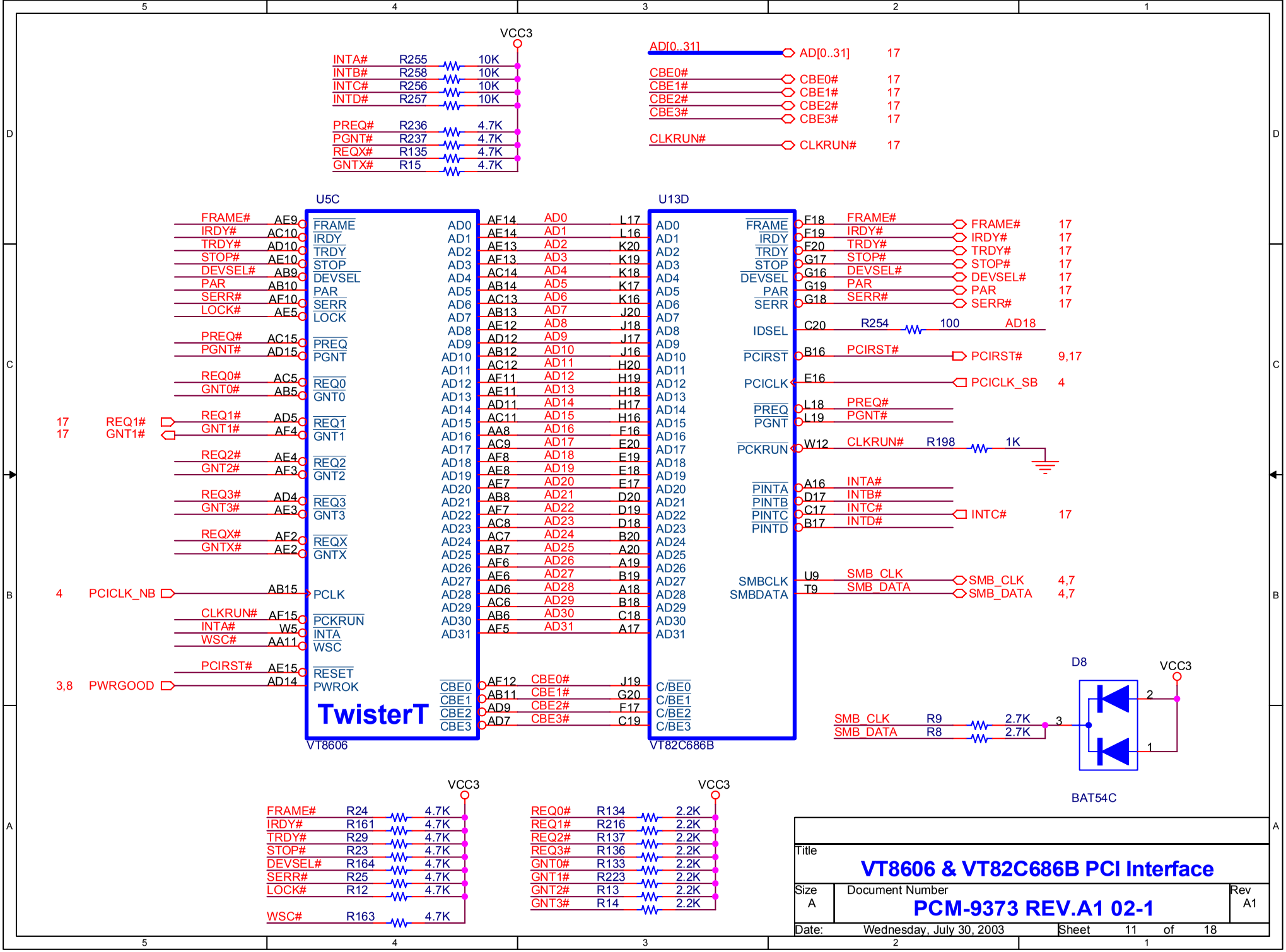
VCC3
INTA# R255 10K
INTB# R258 10K
INTC# R256 10K
INTD# R257 10K
PREQ# R236 4.7K
PGNT# R237 4.7K
REQX# R135 4.7K
GNTX# R15 4.7K
AD[0..31] AD[0..31] 17
CBE0# CBE0# 17
CBE1# CBE1# 17
CBE2# CBE2# 17
CBE3# CBE3# 17
CLKRUN# CLKRUN# 17
U5C
TwisterT
VT8606
U13D
VT82C686B
FRAME# AE9 FRAME
IRDY# AC10 IRDY
TRDY# AD10 TRDY
STOP# AE10 STOP
DEVSEL# AB9 DEVSEL
PAR AB10 PAR
SERR# AF10 SERR
LOCK# AE5 LOCK
PREQ# AC15 PREQ
PGNT# AD15 PGNT
REQ0# AC5 REQ0
GNT0# AB5 GNT0
17 REQ1# AD5 REQ1
17 GNT1# AF4 GNT1
REQ2# AE4 REQ2
GNT2# AF3 GNT2
REQ3# AD4 REQ3
GNT3# AE3 GNT3
REQX# AF2 REQX
GNTX# AE2 GNTX
4 PCICLK_NB AB15 PCLK
CLKRUN# AF15 PCKRUN
INTA# W5 INTA
WSC# AA11 WSC
PCIRST# AE15 RESET
3,8 PWRGOOD AD14 PWROK
AD0 AF14 AD0 L17
AD1 AE14 AD1 L16
AD2 AE13 AD2 K20
AD3 AF13 AD3 K19
AD4 AC14 AD4 K18
AD5 AB14 AD5 K17
AD6 AC13 AD6 K16
AD7 AB13 AD7 J20
AD8 AE12 AD8 J18
AD9 AD12 AD9 J17
AD10 AB12 AD10 J16
AD11 AC12 AD11 H20
AD12 AF11 AD12 H19
AD13 AE11 AD13 H18
AD14 AD11 AD14 H17
AD15 AC11 AD15 H16
AD16 AA8 AD16 F16
AD17 AC9 AD17 E20
AD18 AF8 AD18 E19
AD19 AE8 AD19 E18
AD20 AE7 AD20 E17
AD21 AB8 AD21 D20
AD22 AF7 AD22 D19
AD23 AC8 AD23 D18
AD24 AC7 AD24 B20
AD25 AB7 AD25 A20
AD26 AF6 AD26 A19
AD27 AE6 AD27 B19
AD28 AD6 AD28 A18
AD29 AC6 AD29 B18
AD30 AB6 AD30 C18
AD31 AF5 AD31 A17
CBE0 AF12 CBE0# J19 C/BE0
CBE1 AB11 CBE1# G20 C/BE1
CBE2 AD9 CBE2# F17 C/BE2
CBE3 AD7 CBE3# C19 C/BE3
FRAME F18 FRAME# FRAME# 17
IRDY F19 IRDY# IRDY# 17
TRDY F20 TRDY# TRDY# 17
STOP G17 STOP# STOP# 17
DEVSEL G16 DEVSEL# DEVSEL# 17
PAR G19 PAR PAR 17
SERR G18 SERR# SERR# 17
IDSEL C20 R254 100 AD18
PCIRST B16 PCIRST# PCIRST# 9,17
PCICLK E16 PCICLK_SB 4
PREQ L18 PREQ#
PGNT L19 PGNT#
PCKRUN W12 CLKRUN# R198 1K
PINTA A16 INTA#
PINTB D17 INTB#
PINTC C17 INTC# INTC# 17
PINTD B17 INTD#
SMBCLK U9 SMB_CLK SMB_CLK 4,7
SMBDATA T9 SMB_DATA SMB_DATA 4,7
D8
VCC3
SMB_CLK R9 2.7K
SMB_DATA R8 2.7K
BAT54C
VCC3
FRAME# R24 4.7K
IRDY# R161 4.7K
TRDY# R29 4.7K
STOP# R23 4.7K
DEVSEL# R164 4.7K
SERR# R25 4.7K
LOCK# R12 4.7K
WSC# R163 4.7K
VCC3
REQ0# R134 2.2K
REQ1# R216 2.2K
REQ2# R137 2.2K
REQ3# R136 2.2K
GNT0# R133 2.2K
GNT1# R223 2.2K
GNT2# R13 2.2K
GNT3# R14 2.2K
Title
VT8606 & VT82C686B PCI Interface
Size A
Document Number
PCM-9373 REV.A1 02-1
Rev A1
Date: Wednesday, July 30, 2003
Sheet 11 of 18

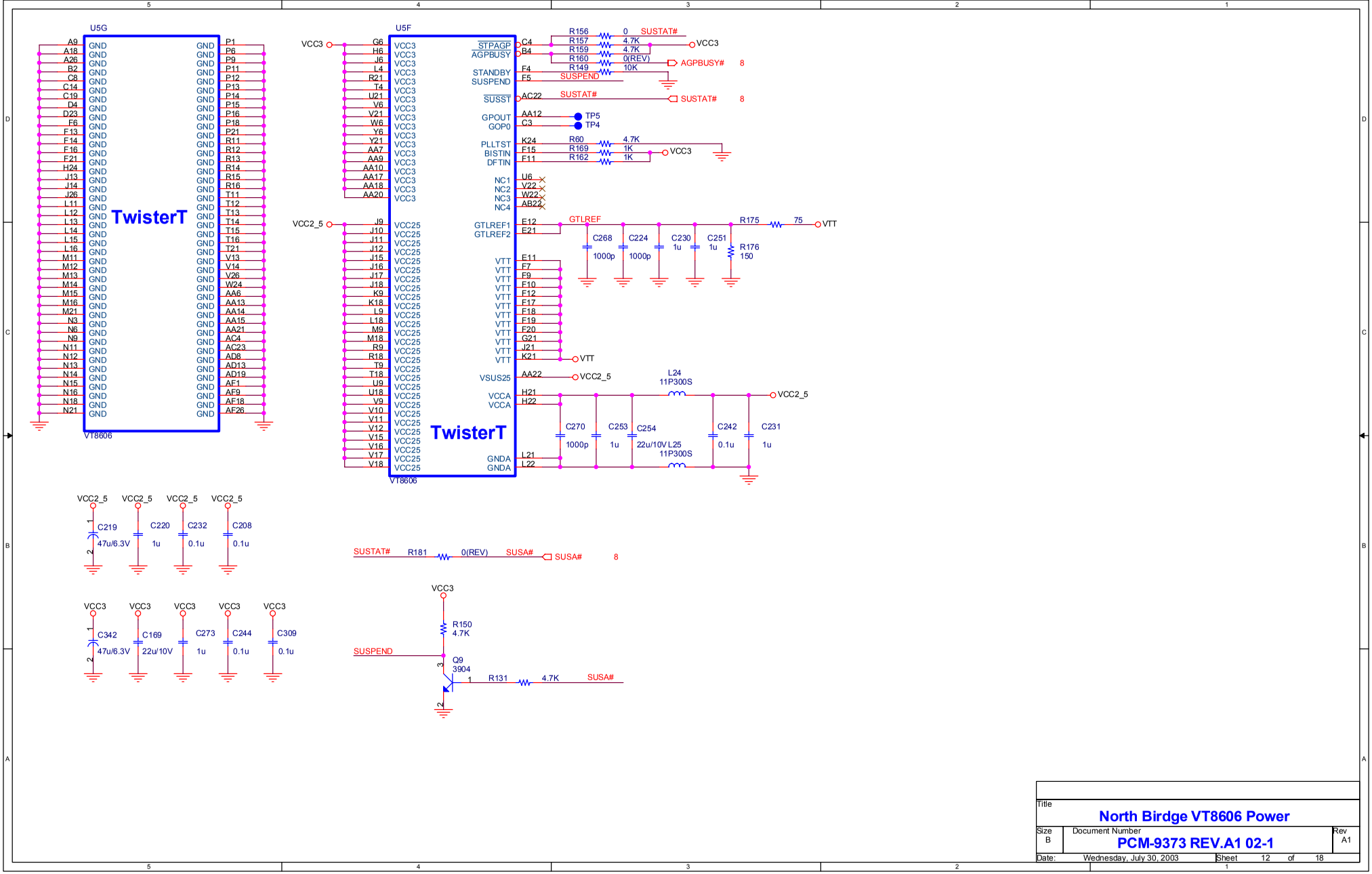

Title
North Birdge VT8606 Power

Size	Document Number	Rev
B	PCM-9373 REV.A1 02-1	A1

Date: Wednesday, July 30, 2003 Sheet 12 of 18

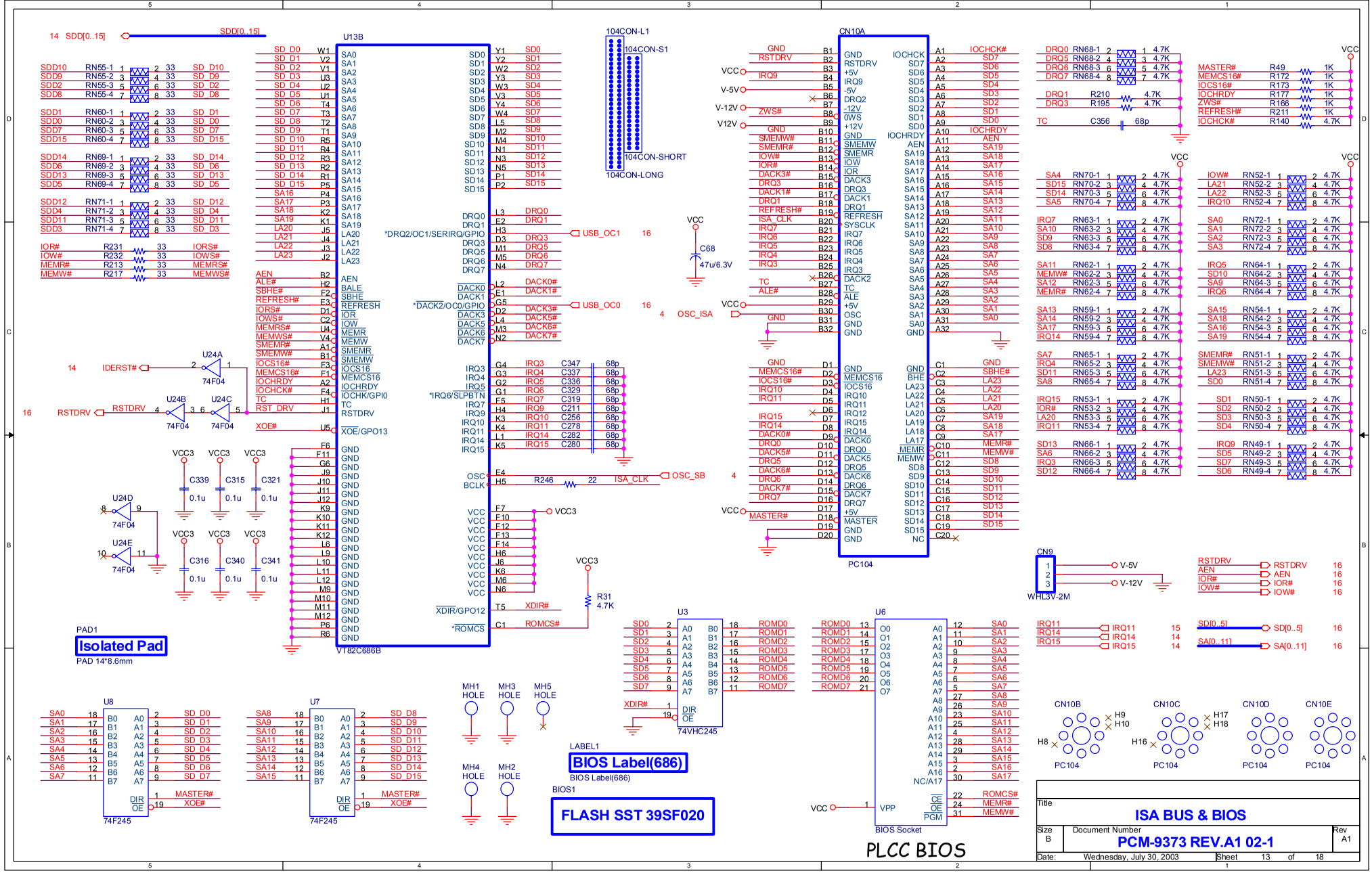
U13B
VT82C686B
CN10A
PC104
104CON-L1
104CON-S1
104CON-SHORT
104CON-LONG
U24A
U24B
U24C
U24D
U24E
74F04
U8
U7
74F245
U3
74VHC245
U6
BIOS Socket
PLCC BIOS
PAD1
Isolated Pad
PAD 14*8.6mm
LABEL1
BIOS Label(686)
BIOS1
FLASH SST 39SF020
MH1 HOLE
MH3 HOLE
MH5 HOLE
MH4 HOLE
MH2 HOLE
CN9
WHL3V-2M
CN10B
CN10C
CN10D
CN10E
Title
ISA BUS & BIOS
Size B
Document Number
PCM-9373 REV.A1 02-1
Rev A1
Date: Wednesday, July 30, 2003
Sheet 13 of 18

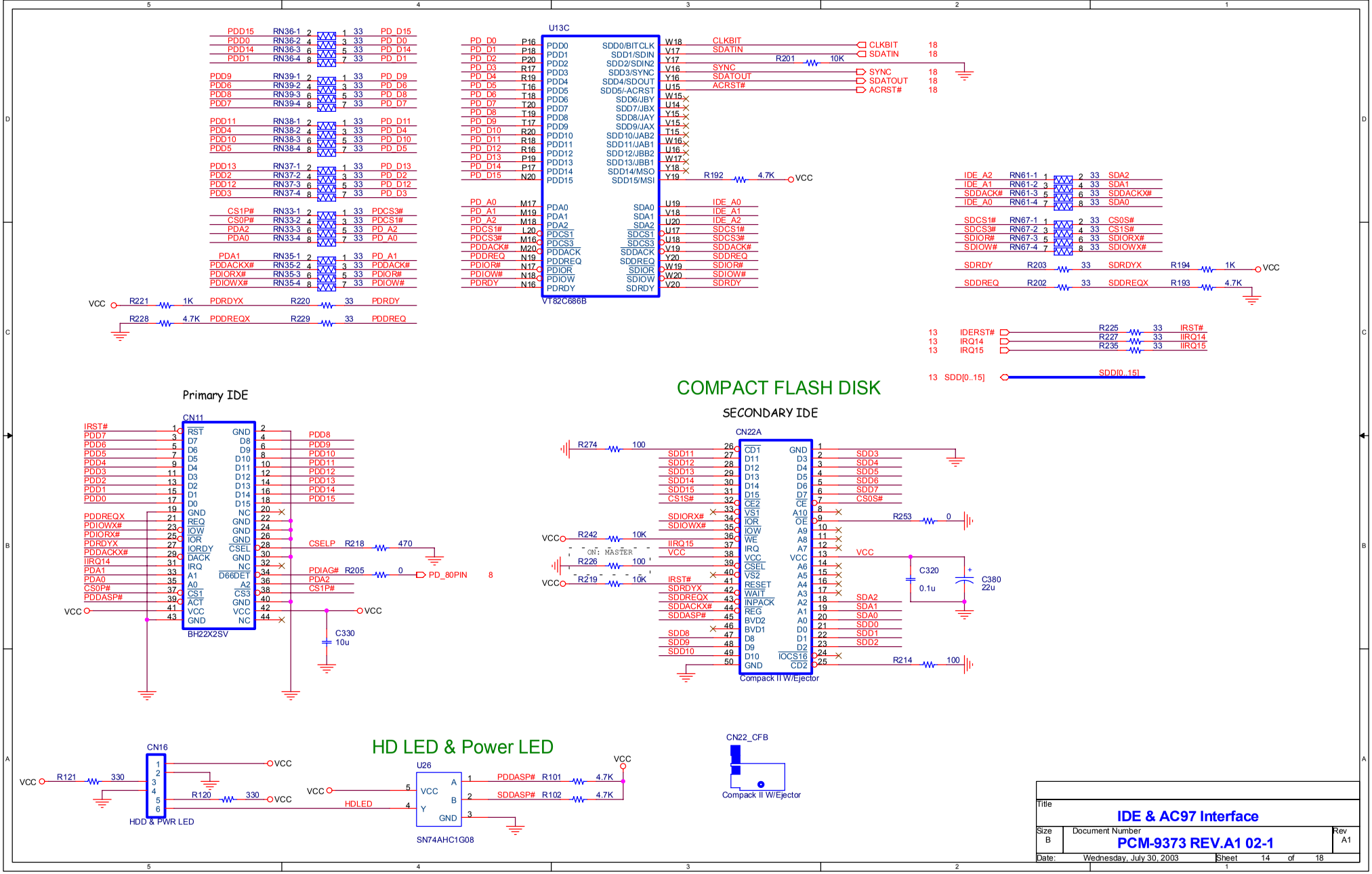
U13C
VT82C686B
CN11
BH22X2SV
Primary IDE
CN22A
Compack II W/Ejector
COMPACT FLASH DISK
SECONDARY IDE
CN16
HDD & PWR LED
HD LED & Power LED
U26
SN74AHC1G08
CN22_CFB
Compack II W/Ejector
Title
IDE & AC97 Interface
Size
B
Document Number
PCM-9373 REV.A1 02-1
Rev
A1
Date: Wednesday, July 30, 2003
Sheet 14 of 18

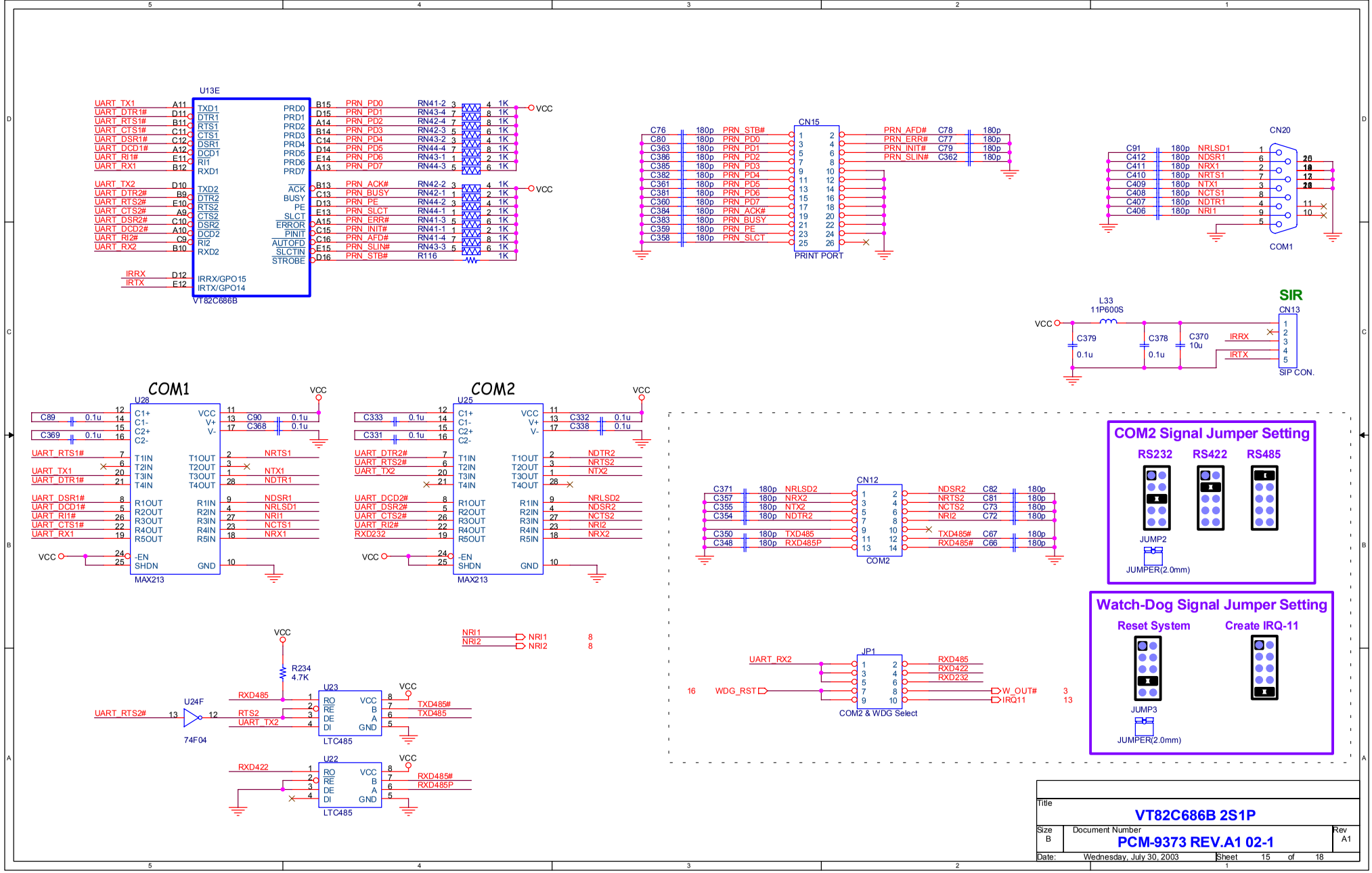
U13E
VT82C686B
CN15
PRINT PORT
CN20
COM1
SIR
CN13
SIP CON.
L33
11P600S
COM1
U28
MAX213
COM2
U25
MAX213
CN12
COM2
JP1
COM2 & WDG Select
U24F
74F04
U23
LTC485
U22
LTC485
R234
4.7K
COM2 Signal Jumper Setting
RS232
RS422
RS485
JUMP2
JUMPER(2.0mm)
Watch-Dog Signal Jumper Setting
Reset System
Create IRQ-11
JUMP3
JUMPER(2.0mm)
Title
VT82C686B 2S1P
Size
B
Document Number
PCM-9373 REV.A1 02-1
Rev
A1
Date:
Wednesday, July 30, 2003
Sheet
15
of
18

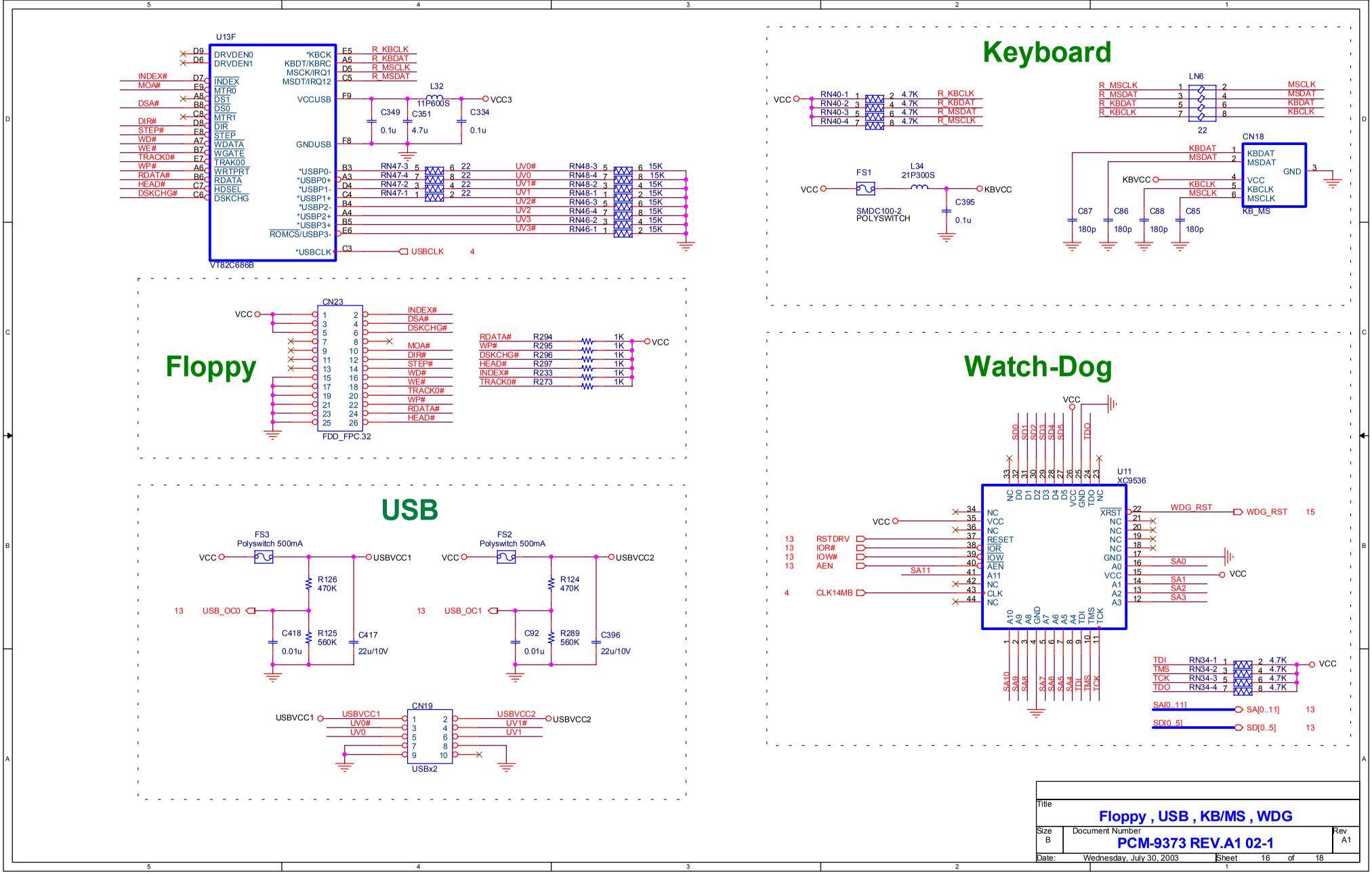

Title

Floppy , USB , KB/MS , WDG

Size	Document Number	Rev
B	PCM-9373 REV.A1 02-1	A1

Date: Wednesday, July 30, 2003 Sheet 16 of 18

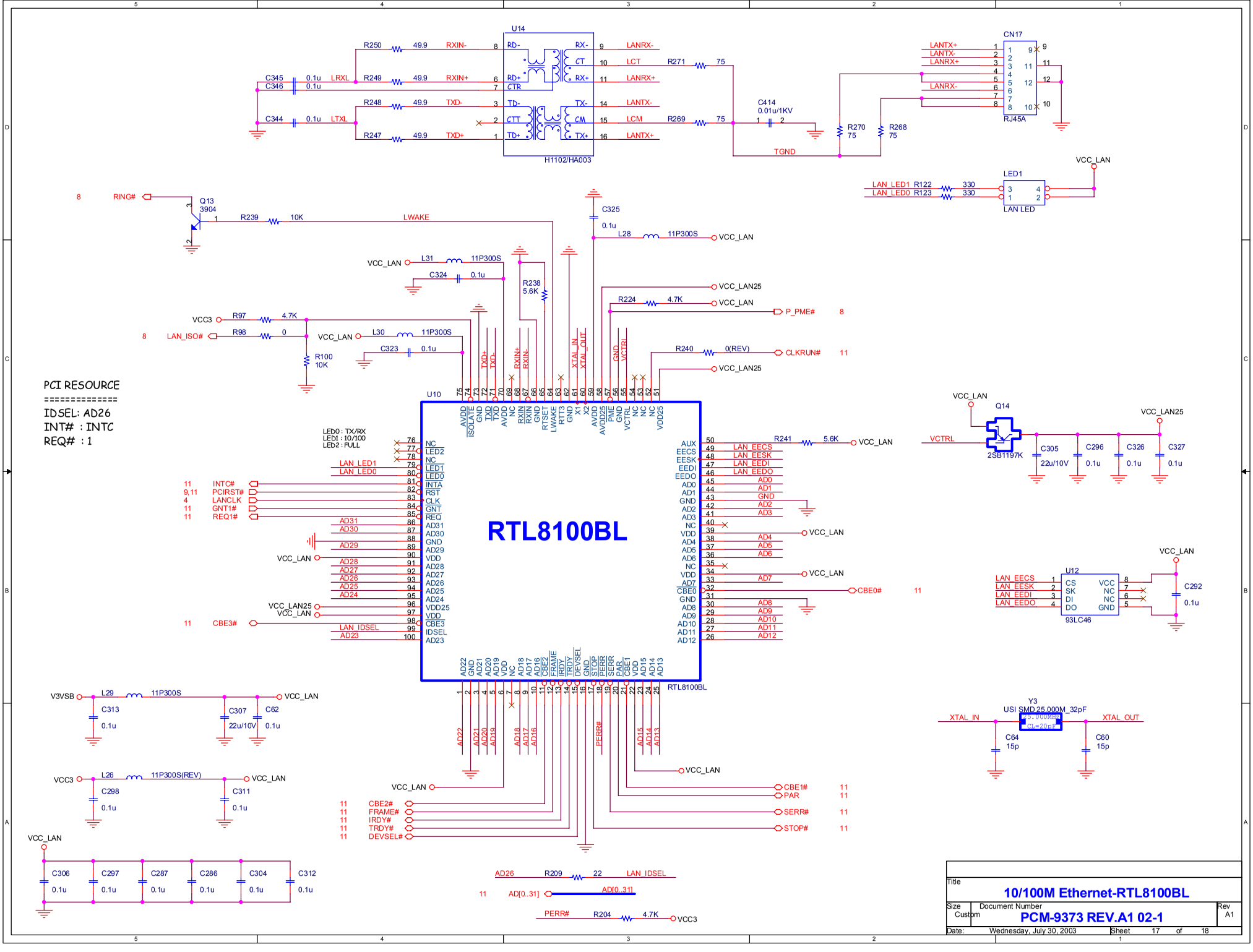
U14
H1102/HA003
CN17
RJ45A
LED1
LAN LED
Q13
3904
Q14
2SB1197K
U10
RTL8100BL
U12
93LC46
Y3
USI SMD 25.000M_32pF
PCI RESOURCE
==========
IDSEL: AD26
INT# : INTC
REQ# : 1
LED0 : TX/RX
LED1 : 10/100
LED2 : FULL
Title
10/100M Ethernet-RTL8100BL
Size
Custom
Document Number
PCM-9373 REV.A1 02-1
Rev
A1
Date: Wednesday, July 30, 2003
Sheet 17 of 18

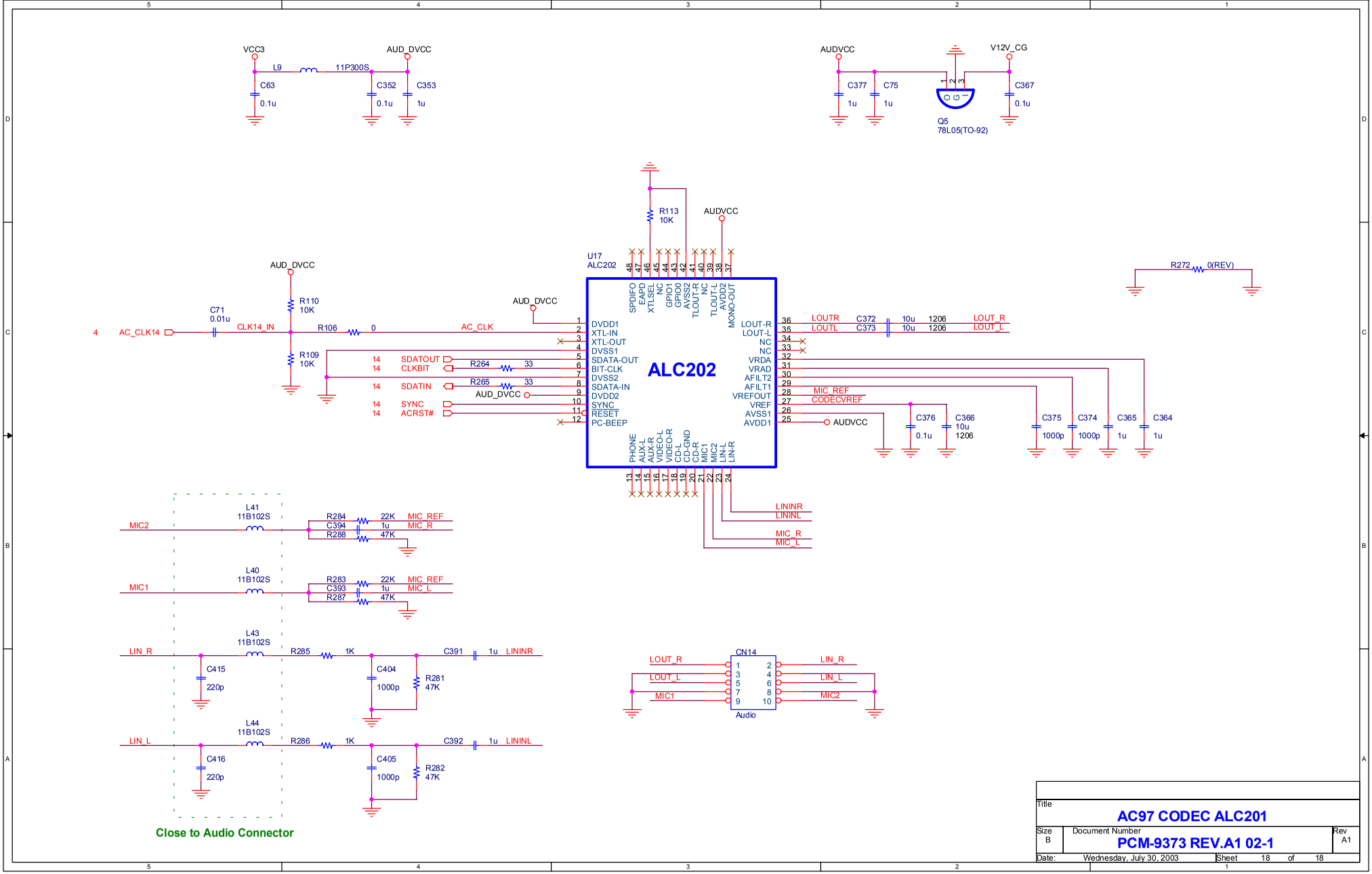
VCC3
L9
11P300S
AUD_DVCC
C63
0.1u
C352
0.1u
C353
1u
AUDVCC
V12V_CG
C377
1u
C75
1u
C367
0.1u
Q5
78L05(TO-92)
R113
10K
AUDVCC
U17
ALC202
ALC202
AUD_DVCC
R110
10K
R109
10K
C71
0.01u
4
AC_CLK14
CLK14_IN
R106
0
AC_CLK
AUD_DVCC
14 SDATOUT
14 CLKBIT
R264
33
14 SDATIN
R265
33
AUD_DVCC
14 SYNC
14 ACRST#
DVDD1
XTL-IN
XTL-OUT
DVSS1
SDATA-OUT
BIT-CLK
DVSS2
SDATA-IN
DVDD2
SYNC
RESET
PC-BEEP
SPDIFO
EAPD
XTLSEL
NC
GPIO1
GPIO0
AVSS2
TLOUT-R
NC
TLOUT-L
AVDD2
MONO-OUT
LOUT-R
LOUT-L
NC
NC
VRDA
VRAD
AFILT2
AFILT1
VREFOUT
VREF
AVSS1
AVDD1
LOUTR
LOUTL
C372
C373
10u
10u
1206
1206
LOUT_R
LOUT_L
MIC_REF
CODECVREF
AUDVCC
C376
0.1u
C366
10u
1206
C375
1000p
C374
1000p
C365
1u
C364
1u
R272
0(REV)
PHONE
AUX-L
AUX-R
VIDEO-L
VIDEO-R
CD-L
CD-GND
CD-R
MIC1
MIC2
LIN-L
LIN-R
LININR
LININL
MIC_R
MIC_L
MIC2
L41
11B102S
R284
22K
MIC_REF
C394
1u
MIC_R
R288
47K
MIC1
L40
11B102S
R283
22K
MIC_REF
C393
1u
MIC_L
R287
47K
LIN_R
L43
11B102S
R285
1K
C391
1u
LININR
C415
220p
C404
1000p
R281
47K
LIN_L
L44
11B102S
R286
1K
C392
1u
LININL
C416
220p
C405
1000p
R282
47K
Close to Audio Connector
LOUT_R
LOUT_L
MIC1
CN14
Audio
LIN_R
LIN_L
MIC2
Title
AC97 CODEC ALC201
Size
B
Document Number
PCM-9373 REV.A1 02-1
Rev
A1
Date:
Wednesday, July 30, 2003
Sheet
18
of
18

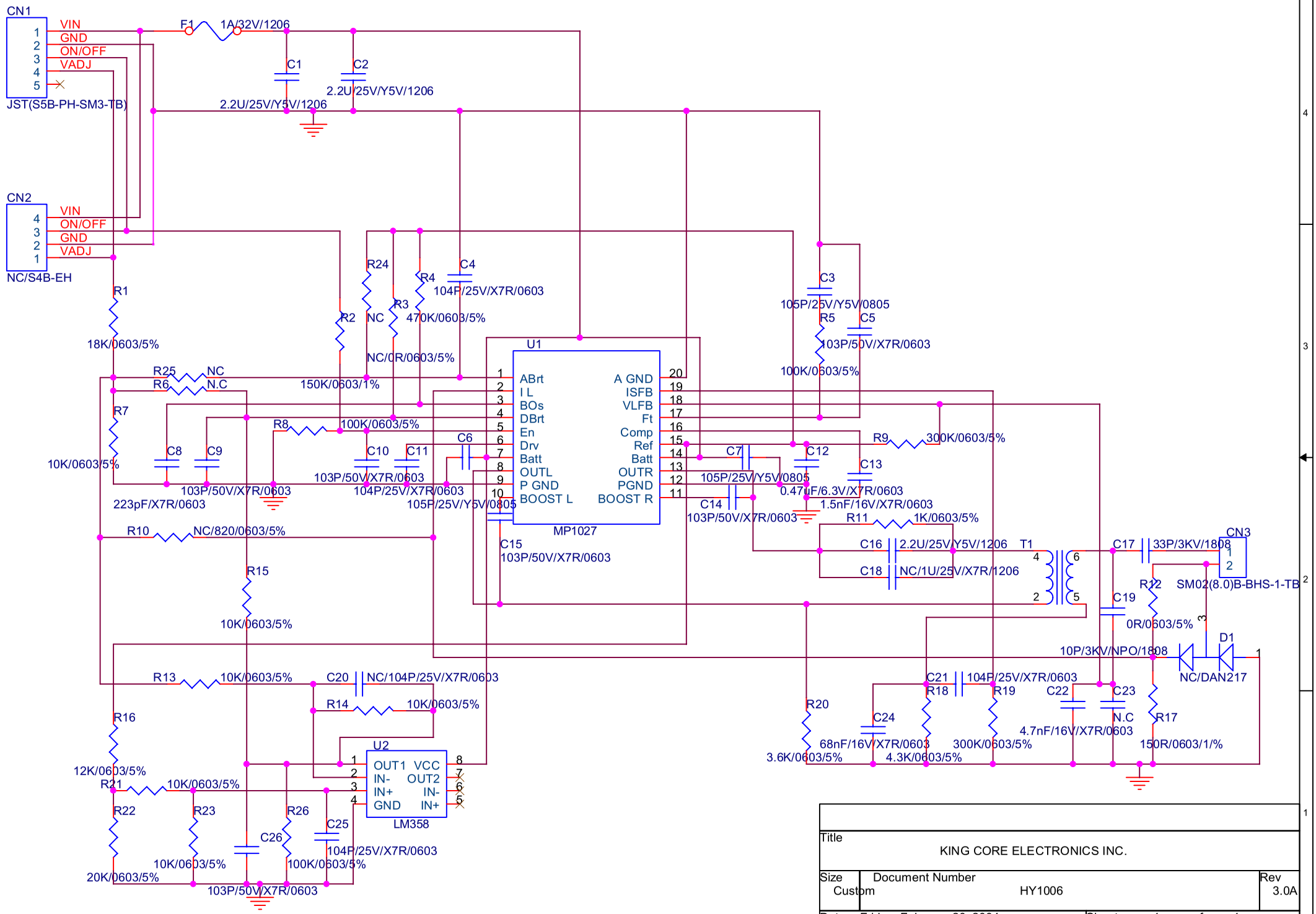
CN1
VIN
GND
ON/OFF
VADJ
JST(S5B-PH-SM3-TB)
F1
1A/32V/1206
C1
2.2U/25V/Y5V/1206
C2
2.2U/25V/Y5V/1206
CN2
VIN
ON/OFF
GND
VADJ
NC/S4B-EH
R1
18K/0603/5%
R2
NC
R24
NC/0R/0603/5%
R3
470K/0603/5%
R4
C4
104P/25V/X7R/0603
C3
105P/25V/Y5V/0805
R5
100K/0603/5%
C5
103P/50V/X7R/0603
R25
NC
R6
N.C
150K/0603/1%
R7
10K/0603/5%
R8
100K/0603/5%
C8
223pF/X7R/0603
C9
103P/50V/X7R/0603
C10
103P/50V/X7R/0603
C11
104P/25V/X7R/0603
C6
105P/25V/Y5V/0805
U1
ABrt
I L
BOs
DBrt
En
Drv
Batt
OUTL
P GND
BOOST L
A GND
ISFB
VLFB
Ft
Comp
Ref
Batt
OUTR
PGND
BOOST R
MP1027
C7
105P/25V/Y5V/0805
C12
0.47uF/6.3V/X7R/0603
C13
1.5nF/16V/X7R/0603
R9
300K/0603/5%
C14
103P/50V/X7R/0603
R11
1K/0603/5%
C15
103P/50V/X7R/0603
R10
NC/820/0603/5%
R15
10K/0603/5%
C16
2.2U/25V/Y5V/1206
C18
NC/1U/25V/X7R/1206
T1
C17
33P/3KV/1808
CN3
SM02(8.0)B-BHS-1-TB
R12
0R/0603/5%
C19
10P/3KV/NPO/1808
D1
NC/DAN217
R13
10K/0603/5%
C20
NC/104P/25V/X7R/0603
R14
10K/0603/5%
R16
12K/0603/5%
R21
10K/0603/5%
U2
OUT1
IN-
IN+
GND
VCC
OUT2
IN-
IN+
LM358
R22
20K/0603/5%
R23
10K/0603/5%
R26
100K/0603/5%
C26
103P/50V/X7R/0603
C25
104P/25V/X7R/0603
R20
3.6K/0603/5%
C24
68nF/16V/X7R/0603
C21
104P/25V/X7R/0603
R18
4.3K/0603/5%
R19
300K/0603/5%
C22
4.7nF/16V/X7R/0603
C23
N.C
R17
150R/0603/1/%
Title
KING CORE ELECTRONICS INC.
Size
Custom
Document Number
HY1006
Rev
3.0A
Date: Friday, February 20, 2004
Sheet 1 of 1

CAM350 Shareware V 7.0 : Wed Sep 03 16:29:19 2003 - (Untitled)

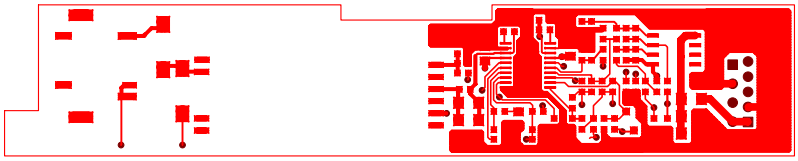

COMP

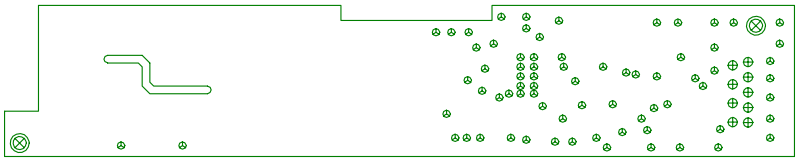

DRILL 0.5MM 0.9MM 2.3MM(N.P.)

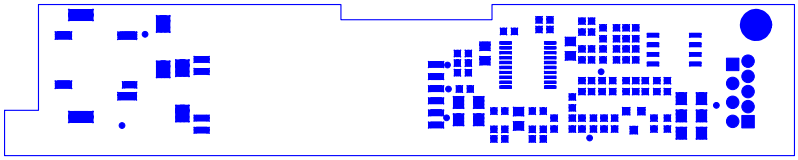

COMP MSK

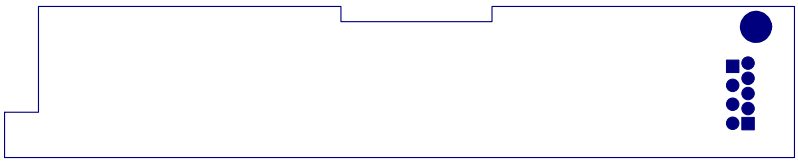

SOLDER MSK

SLKBOT

SOLDER

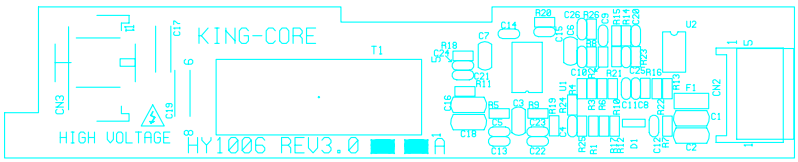

SLK

Enclosure

Photographs

(Total 4 Pages including this Cover Page)

Description
1. External view of bottom side
2. External view of top side
3. Internal view of unit

External view of bottom side

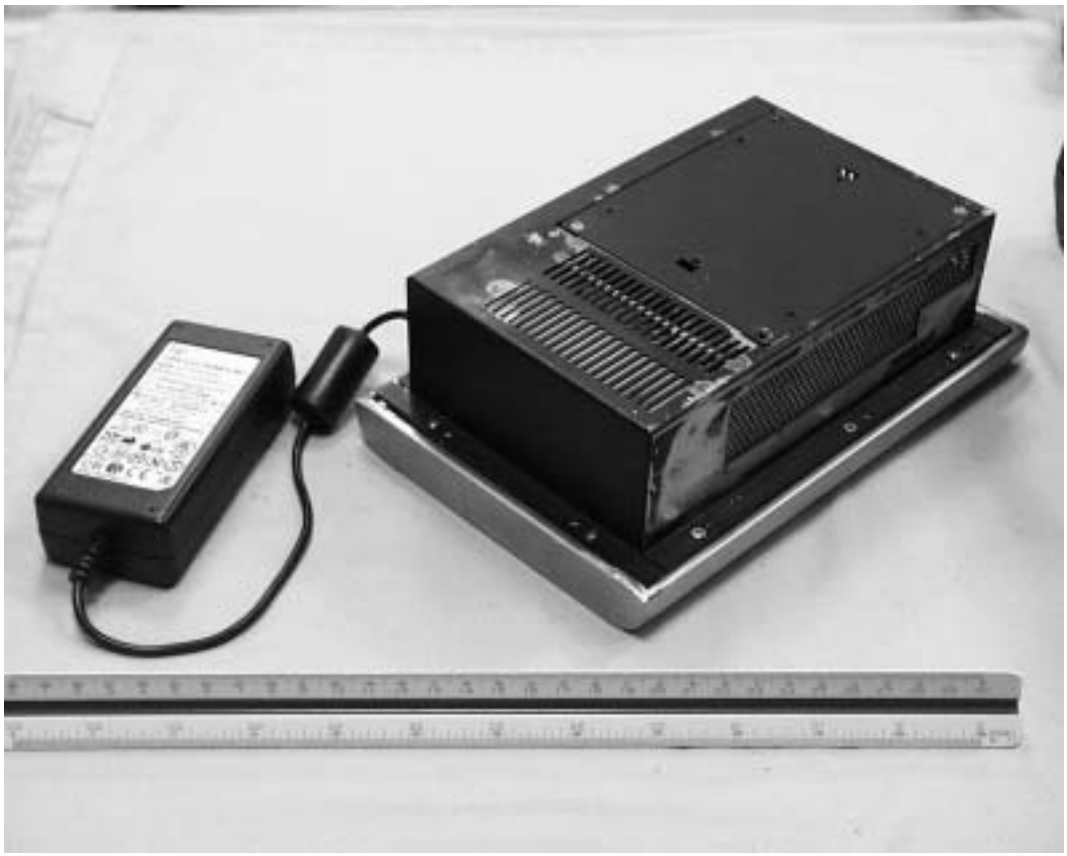

External view of bottom side

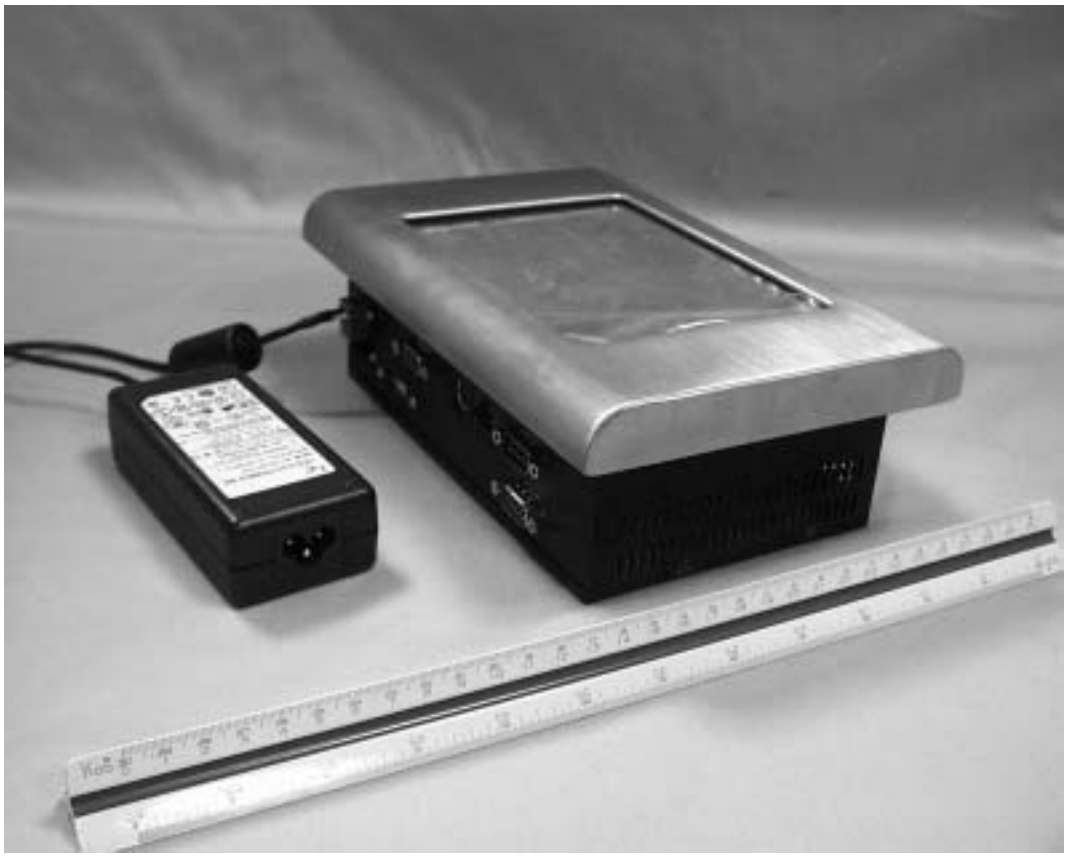

Internal view of unit

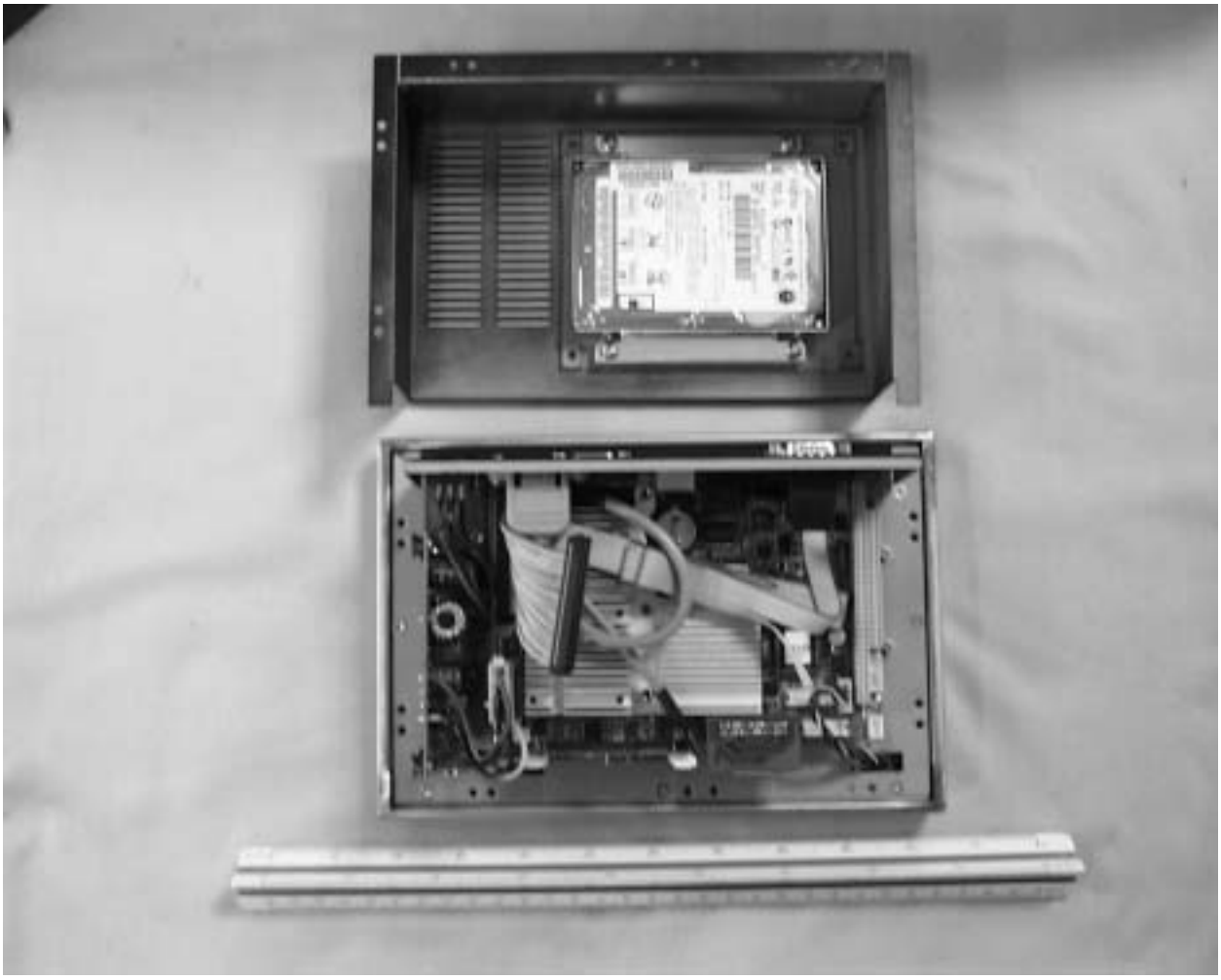

Enclosure

User's Manual

(Total 6 Pages including this Cover Page)

CHAPTER 1

General Information

This chapter gives background information on the PPC-L60T PPC

Sections include:

- Introduction
- General Specifications
- LCD Specifications
- Dimensions

Chapter 1 General Information

1.1 Introduction

The PPC-L60T is an industrial grade PPC designed without fan, which make it more reliable.
The 6.4" TFT VGA display is a compact platform designed for small-sized operator interface applications.

1.2 General Specifications

General

- **Dimensions (W x H x D):** 218 x 55 x 148 mm (Preliminary)
- **Weight:** 2 kg
- **Power supply:**
  60 watts AT type
  Input voltage: 12~24V DC
  Output voltage: 5V@6A, 12V@1A

  Power Adapter: AC/DC
  Input voltage: 110 Vac~240Vac , Normal
  Output voltage: 19Vdc@3.16A

- **Front panel:** IP65/NEMA4 compliant

Standard PC functions

- **CPU:** Embedded VIA Eden 400 MHz CPU
- **BIOS:** Award 256 KB Flash BIOS, supports Plug & Play, APM
- **System Chipset:** VIA PN 133T Chipset (TwisterT) & VT82C686B
- **Front side bus:** 133 MHz
- **System Memory:**

  One 144 pin SODIMM socket up to 512 MB SDRAM
- **PCI bus master IDE interface:** Supports two connectors. Each connector has one channel and supports two IDE devices. Each channel supports PIO modes 0 ~ 4, DMA mode 0 ~ 2, and Ultra DMA 33/66/100 simultaneously. The secondary connector is designated for the CD-ROM drive or CompactFlash card. BIOS supports IDE CDROM boot-up
- **Keyboard/mouse connector:** Supports 1 standard AT Keyboard and a PS/2 Mouse
- **Serial ports:** Two serial ports with one RS-232 ports (COM 1) ,and one RS-232/422/485 port (COM2). All ports are compatible with 16C550. UARTs, +5V/+12V power supply selectable
- **Universal serial bus (USB) port:** Supports one V1.1 USB port, Intel UHCI v1.1 compatible
- **Mini PCI bus expansion slot:** Accepts one type lll mini PCI bus card
- **Solid State Disk:** Supports one 50-pin socket for CompactFlash type I/II (True IDE mode) or IBM MicroDrive HDD
- **Watchdog timer:** 62-level timer intervals automatically generates system reset or IRQ11 when the system stops due to a program error or EMI. Jumperless selection and software enabled/disabled
- **Battery:** 3.0 V @ 195 mA lithium battery
- **Power management:** Supports power saving modes including Normal/Standby/Suspend modes. APM 1.2 compliant

VGA/Flat panel interface

- **Chipset:** VIA Twister chip w/ integrated Savage4 2D/3D/Video Accel-erator
- **Frame Buffer:** Supports 8/16/32 MB frame buffer w/ system memory

- **Display type:** Simultaneously supports CRT and flat panel displays (EL, LCD and gas plasma)

Audio function

- **Chipset:** Integrated in VIA 82C686 South Bridge
- **Audio controller:** AC97 Ver. 2.0 compliant interface, Multi stream Direct sound and Direct Sound 3D acceleration
- **Stereo sound:** 18-bit full-duplex codec
- **Audio interface:** Line out

PCI bus Ethernet interface

- **Chipset:** Realtek RTL8100C PCI local bus Ethernet controller
- **Ethernet interface:** Full compliance with IEEE 802.3u 100Base-T and 10 Base-T specifications. Includes software drivers and boot ROM.
- **100/10Base-T auto-sensing capability**

Touchscreen (Optional)

Type	**Analog Resistive**
Resolution	Continuous
Light Transmission	75%
Controller	USB interface
Power Consumption	<5 V@ 100 mA
Software Driver	Supports Windows 98/2000/ME/XP

Environment

- **Operating Temperature:** 0 ~ 40° C 0
- **Storage Temperature:** -20 ~ 60° C
- **Relative Humidity:** 10 ~ 95% @ 40° C (non-condensing)
- **Shock:** 10 G peak acceleration (11 msec duration)
- **Certifications:** EMC: CE, FCC. Safety: UL1950.
- **Vibration:** 5 ~ 500 Hz 1 G RMS Random vibration (operating with HDD)

1.3 LCD Specifications

- **Display type**: 10.4" TFT LCD
- **Max. resolution**: 800 x 600
- **Colors**: 256 K
- **Dot size (mm)**: 0.264 x 0.264
- **Luminance**: 230 cd/m^2
- **Temperature**: 0 ~ 50° C
- ***VR control**: Brightness
- **LCD MTBF**: 50,000 hours
- **Backlight lifetime**: 20,000 hours

  * The VR control is defined by hot key in DOS or BIOS mode as below: Ctrl-Alt-F3, Ctrl-Alt-F4.

Note: The color LCD display installed in the panel PC is high-quality and reliable. However, it may contain a few defective pixels which do not always illuminate. With current technology, it is impossible to completely eliminate defective pixels. Advantech is actively working to improve this technology.

Enclosure

Test Reference

(Total 52 Pages including this Cover Page)

Description
1. Lithium battery spec
2. Panel specification

台灣廣登電子股份有限公司

QuadRep Electronics [T] Ltd.

TEL : (02)2698-9933 FAX : (02)2698-9911

APPROVED SHEET 承 認 書

21-Feb-03 AVT

CUSTOMER : 研華股份有限公司

台北縣新店市民權路**130**巷**7**號**3**樓**--**四廠

代碼	VENDER	VENDER P/N	Description	CUSTOMER P/N
16306	RAYOVAC	BR1632	3.0-Vilt,130mAh LIFEX CELL	

APPROVED BY :

APPLIED BY : 台灣廣登電子股份有限公司

台北縣汐止鎮新台五路一段 **79** 號 **4** 樓之 **10**

劉輔智 Peter Liu

Application Notes & Product Data Sheet

Lifex™ Lithium Coin Cells & FB Encapsulated Lithium Coin Cells - Part 1

I. Introduction

Lithium has become a generic term representing a family of battery systems in which lithium metal is used as the active anode material or negative electrode. Variations in the cathode material, or positive electrode, and the cell electrolyte result in hundreds of possible combinations of lithium batteries. Rayovac Lifex™ lithium carbon-monofluoride (LiCFx) batteries are a solid-cathode type which optimizes reliability, safety, cost and performance.

II. Features

- Outstanding shelf life and excellent performance over a wide temperature range
- Stable discharge voltage
- High energy density and voltage (3V)
- Enhanced safety by the use of carbon-monofluoride electrode material and a non-corrosive, non-toxic electrolyte
- Excellent leak resistance
- Shelf life of ten years or more
- Pre-tinned nickel terminals are solderable
- Available with other wave-solderable terminal configurations

III. Quallty Systems Certification

CERTIFIED ISO 9001

Accredited by the Dutch Council for Certification for certification and registration activities.

INTERTEK CERTIFICATION

ACCREDITED REGISTRAR ANSI·RAB

IV. Applications

The following devices are examples of good uses for Lifex cells:

- Computer Memory and Real Time Clock Backup
- Electronic Counters, Process Controllers
- Portable Instruments
- Time/Data Protection
- Industrial Controls
- Electronic Gas, Water and Electric Meters
- Communication Equipment
- Watches
- Protection of Control Parameter Memory
- Portable Electronic Devices

Application Considerations

Rayovac Lifex coin cells and batteries should be considered for applications that are characterized by a need for:

Miniaturization
Leakage resistance
Light weight
Shock and vibration tolerance
Low to moderate current drains
Environments requiring extended operation or storage at a wide range of temperatures
The need for flat discharge voltage and consistent source impedance
Long shelf life
An extended service life due to low self-discharge rate
Enhanced safety and reduced product liability concerns
U.L. recognized components

V. Construction

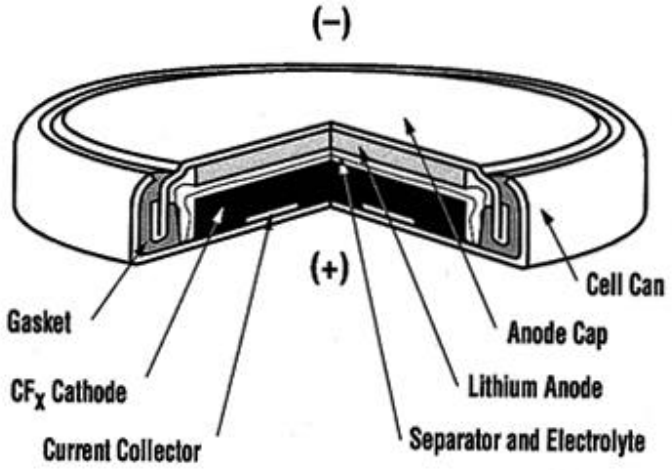

VI. Battery Selection

Component Class Batteries and Cells

Today's circuit designers recognize the capabilities of Lifex coin cells and Lifex FB™ batteries to function as permanent components in theircircuits. Lifex FB batteries exhibit reliability rates similar to diodes and resistors.

The combination of very low power Complementary Metal-Oxide Semiconductor (CMOS) memory devices with high energy, long life batteries now allow for batteries to be used as life-of-product components.

The traditional approach to product design is to provide sufficient energy to meet a design target for a stated period, at which time the batteries would be replaced. The decision to provide component or expendable power is fundamental to the product concept of the device being powered.

Component batteries allow the designer to increase the reliability and functionality of the device by eliminating the need for consumer replacement of batteries. Component batteries eliminate the problems of reversed polarity, wrong chemical system, mismatched capacities, and higher operating costs. However, component batteries require careful selection. The batteries must assure adequate energy for the expected load to compensate for self-discharge and the thermal environment expected, and the batteries must also have a high reliability connection to the circuit.

Today's demand for high performance, small footprint, reliable, and cost-effective electronic products can be realized by identifying the best match between the battery and its application. To do so requires a good understanding of the device's power requirements and the environment in which it is used as well as how the battery reacts to those loads and environments.

It is important that the battery be considered early in the design process. This will allow the optimization of battery life through the selection of power conserving circuit components. Moreover, early battery selection will also minimize circuit and mechanical layout changes later in the designprocess.

The following is a list of basic application characteristics and conditions that must be considered for an optimum selection of a lithiumcarbon-monofluoride power source.

Electrical Characteristics

- Voltage: maximum/minimum
- Current drain
- Pulse currents
- Pulse time/frequency of occurrence

Application Goals

- Duty cycle
- Service life goal
- Shelf life goal
- Reliability
- Safety
- Battery availability

Packaging

- Shape
- Terminals
- Weight
- Contact materials
- Case materials

Environmental

- Operating temperature range
- Storage temperature range
- Humidity
- Shock and vibration
- Atmospheric pressure

VII. Calculating Battery Life

The design of an electronic circuit powered by a component class battery requires the designer to consider two interacting paths that determine a battery's life: consumption of active electrochemical components and thermal wear-out.

To optimize battery life in powered devices, today's designers are first selecting power conserving circuit components, and then specifying high reliability component lithium batteries. Battery selection is based on an understanding of the thermal capabilities, effects of the operating environment, and the battery life requirements of the powered device.

Figure 1, below, gives an estimate of years of service at various discharge currents for Lifex™ lithium coin cells at room temperatures.

Consumption of Active Battery Components

Batteries produce electrical current by oxidation and reduction of their active electrochemical components. Once these components are consumed, the battery ceases to produce current. The sum of the energy consumed by the circuit over its expected life plus the electrochemistry's inherent loss of energy due to self-discharge, represents the first path in determining battery life.

Thermal Wear-Out

The second path in determining battery life is thermal wear-out, which is the loss of capacity caused by thermal mechanisms. Generally, thermal wear-out rates accelerate as temperatures in the operating environment rise.

It is very important to hold the paths of self-discharge and thermal wear-out as separate issues. This is because self-discharge can sometimes be compensated for by increasing the specified battery capacity, while thermal wear-out can only be addressed by selecting a more thermally capable battery.

Drain vs. Duration

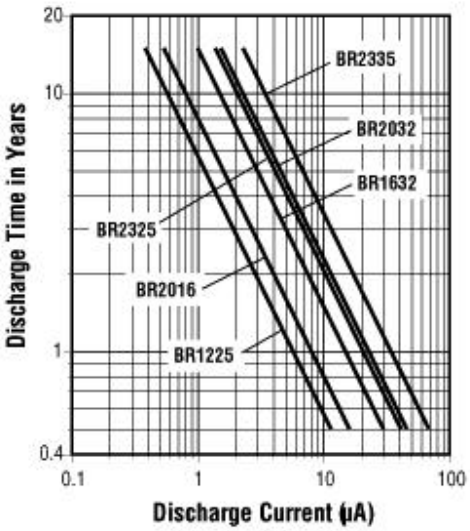

Figure 1

Battery Life and Capacity Estimates

Rayovac has accumulated over 200 million device hours of accelerated reliability testing with a major semiconductor manufacturer. This data has allowed us to gain a better understanding of the time and temperaturedependent wear-out of Lifex coin cells and Lifex FB™ batteries during storage.

A set of Arrhenius equations developed from this database allows storage time and temperature effects to be included in a cell life estimate.

It became evident that the number of calculations required to adequately represent an actual application were too great to compute without some form of automation. As a result, Rayovac has developed a computer program to calculate both self-discharge and thermal wear-out as well as the capacity required for even complex load profiles.

To make use of the program, Lifex™ and Lifex FB™ Lithium Battery Design Template, please consult with Rayovac's Applications Engineering Department. They are equipped to assist at any time. Be ready to respond with the application's current load profile, operating environment temperature profile, and life goal. An Applications Engineering Work Sheet is provided for your convenience.

Using our database and calculations, we can compute annual capacity consumed, annual self-discharge, and the thermal wear-out life limit (TWOLL). By comparing the life goal to TWOLL, the needed battery capacity can be calculated. Then, you select the Rayovac battery solution that best fits your requirements.

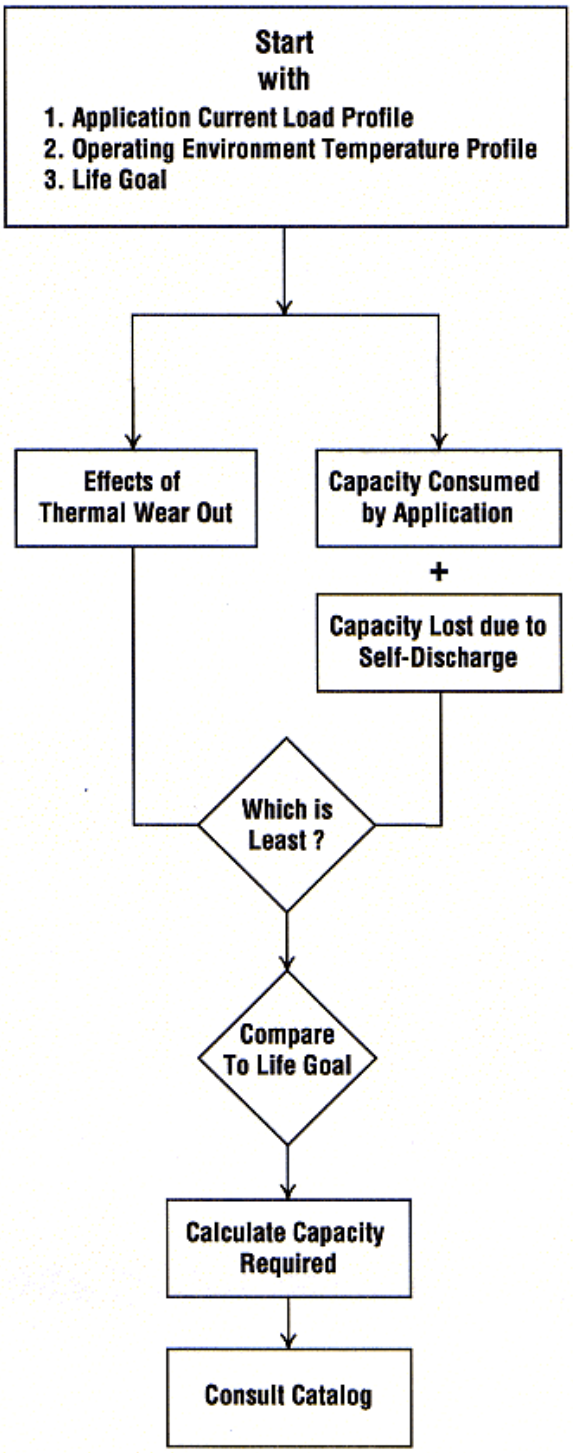
Start
with
1. Application Current Load Profile
2. Operating Environment Temperature Profile
3. Life Goal
Effects of
Thermal Wear Out
Capacity Consumed
by Application
+
Capacity Lost due to
Self-Discharge
Which is
Least ?
Compare
To Life Goal
Calculate Capacity
Required
Consult Catalog

VIII. Performance Characteristics

A. System Self-Discharge Comparison

Lifex™ lithium carbon-monofluoride cells offer substantially lower self-discharge rates compared to other battery chemistries. Figure 2 compares the capacity loss due to self-discharge over a range of temperatures for various battery chemistries. Lifex lithium coin cells provide self-discharge rates of less than 0.3% per year and Lifex FB™ batteries less than 0.2% per year.

System Self-Discharge Rate vs. Temperature

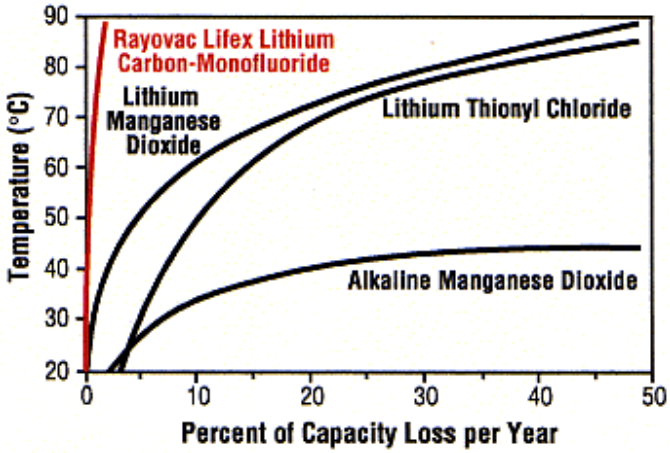

Figure 2

B. Thermal Wear-Out

At high temperatures, Rayovac's Lifex coin cells and Lifex FB batteries offer significantly lower failure rates over competing coin cells. Figure 3 shows the relationship between temperature and the years to 1% failure of 12.5mm diameter cells of similar capacity. A failure is defined as a closed circuit voltage less than 2.0 volts on a 250K ohm load of 0.5 second duration.

Lithium Coin Cells Temperature/Life Relationship

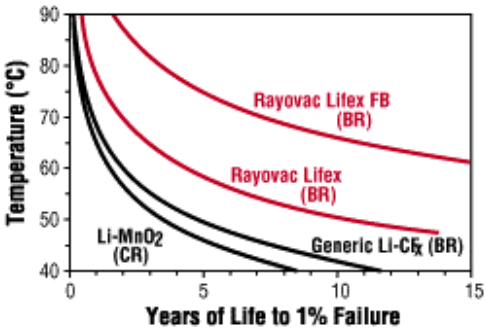

Figure 3

C. High Temperature Storage Performance

The advantage of Rayovac Lifex coin cell performance after high temperature storage is further illustrated in the figure below. Figure 4 shows how the Lifex BR2325 coin cell compares with other lithium carbon-monofluoride (BR) and lithium manganese dioxide (CR) cells when stored at high temperature. The data presents the results of weekly closed circuit voltage measurements on a 1K ohm load at 0.5 second duration after high temperature storage. The test was started at a storage temperature of 70°C and then later increased to 85°C to allow for the temperature limitations of the CR cell.

High Temperature Performance Comparison

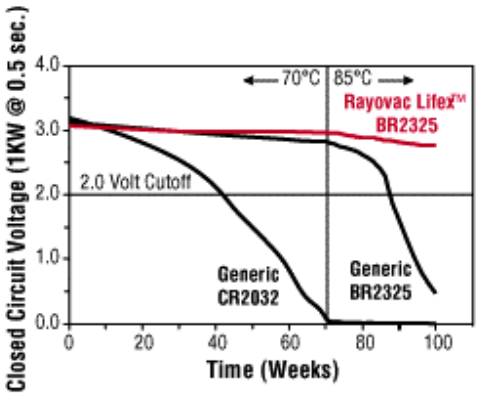

Figure 4

D. Internal Operating Resistance During Discharge

Figure 5 below shows how the internal resistance and voltage changes on a BR1225 cell as a percent of discharge. Similar profiles with slightly different values are observed with other cell sizes. The typical initial 1KHz AC internal resistance for each cell size is shown in Figure 6.

Internal Resistance and CCV of Lifex™ BR1225 Cell During 15K ohm Discharge

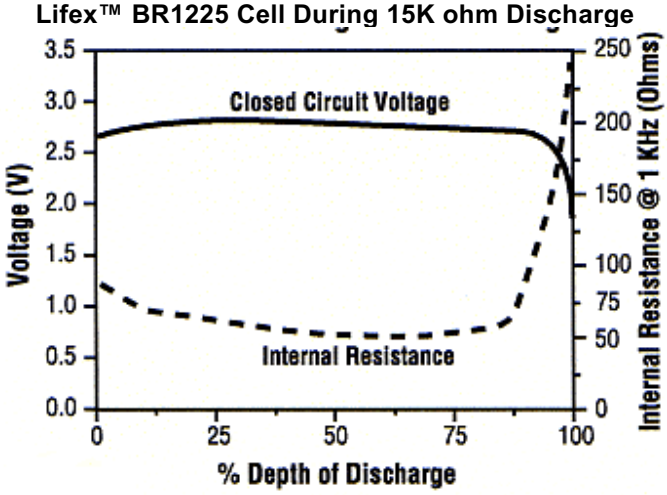

Figure 5

Typical Initial Internal Resistance at 1 KHz AC

Cell Size	Internal Resistance (Ohms)
BR1225	85
BR1632	34
BR2016	19
BR2032	25
BR2325	16
BR2335	21

Figure 6

E. System Internal Resistance Comparison

Rayovac Lifex coin cells provide more stable internal resistance throughout discharge compared to lithium manganese dioxide coin cells as shown in Figure 7. This is due to the formation of conductive carbon as a discharge by-product in the cell cathode during discharge. This carbon prevents a change in internal resistance until the active compnents of the cell are consumed.

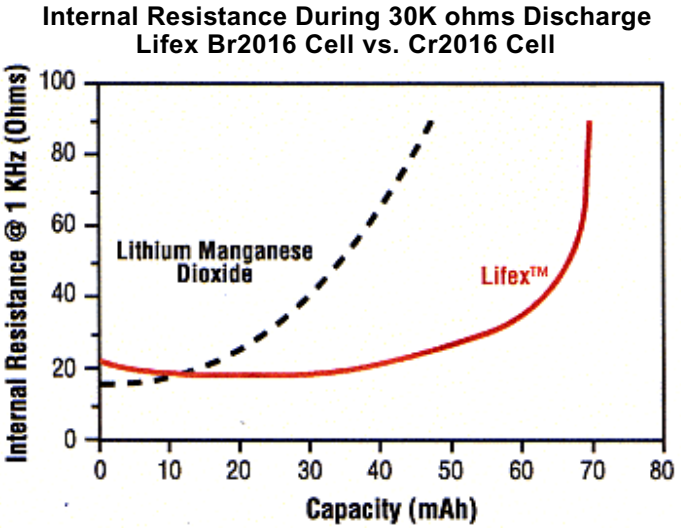

Figure 7

F. Operating & Storage Temperature Range

Rayovac Lifex lithium coin cells and Lifex FB™ batteries provide excellent performance over a wide range of temperatures. The operating and storagetemperature ranges are as follows:

Lifex Coin Cells	-40°C to +85°C (-40°F to +185°F)
Lifex FB Batteries	40°C to +100°C (-40°F to +212°F)

G. Safety

Figure 8 below compares the safety of the three most common lithium systems. The figure demonstrates that the Rayovac Lifex™ battery components are extremely safe.

Rayovac Lifex batteries have been granted U.L. Component Recognition (file no. MH12542). The battery's components are both chemically and thermally stable before, during, and after discharge. The electrolyte is bothnon-corrosive and non-toxic.

RECOGNIZED UNDER THE COMPONENT PROGRAM OF UNDERWRITERS LABORATORIES® INC.

Safety Comparison of Lithium Systems

Battery System/IEC Nomenclature	Class	Cathode Material	Cathode Properties	Electrolyte Salt Material	Electrolyte Salt Property	Electorlyte Solvent
Lithium Carbon-Monofluoride Li/(CF)x BR	Solid Cathode	Poly Carbon-Monofluoride	Solid Stable	Lithium Tetra Fluoroborate LiBF4	Stable	Propylene Carbonate & 1,2 Dimethoxyethane (PC & DME)
Lithium Manganese Dioxide Li/MnO2 CR	Solid Cathode	Manganese Dioxide	Solid Stable	Lithium Perchlorate LiClO4	Explosive	PC & DME
Lithium Thionyl Chloride LiSOCl2	Soluble Cathode	Thionyl Chloride	Liquid Toxic Corrosive	Lithium Tetra Chloroaluminate LiAlCl4	Corrosive	Thionyl Chloride (SOCl2)

Figure 8

H. High Altitude Exposure

It is possible for components to be exposed to reduced pressures during shipment by air. Rayovac Lifex batteries that were tested at reduced pressures of 3 mm mercury for 10 days and then discharged at normal rates exhibited the following results:

1. No change in cell appearance.
2. No observed leakage.
3. No change in resulting capacity.

I. Charging Characteristics

Although any charging of Lifex™ cells is to be avoided, some charging may occur even in a well designed electrical circuit due to leakage current of the protecting diodes. The diode used in a circuit design with a Lifex cell should minimize leakage to within 3% of the rated capacity of the cell over the lifetime of the cell's use. Figure 9 below provides the maximum total charge allowance for all cell sizes. Figure 10, which illustrates these limits as they apply to the BR1225 and BR2325 cell sizes at various drain rates, follows.

Maximum Total Charge Allowance

Cell Size	Rated Capacity	3% of Capacity
BR1225	50 mAh	1.50 mAh
BR1632	130 mAh	3.90 mAh
BR2016	70 mAh	2.10 mAh
BR2032	195 mAh	5.85 mAh
BR2325	180 mAh	5.40 mAh
BR2335	300 mAh	9.00 mAh

Figure 9

Formula to calculate charge current:

Imax(nA) = 114.15 x c/t

Where:

I_{max} =Maximum allowable charge current in nanoAmperes (nA)

c = Maximum total charge capacity in mAh from table above

t = Time on charge in years

Maximum Total Charge Allowance

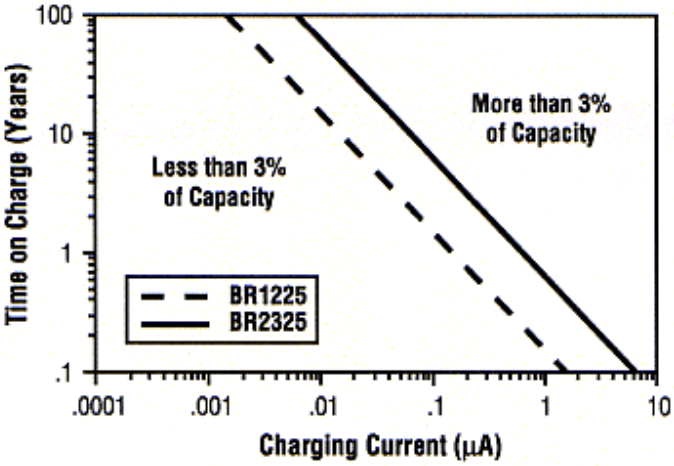

Figure 10

J. Short Circuit Recovery

In the process of wave soldering tabbed versions of the Lifex batteries to circuit boards, a temporary short will occur. Figure 11 below shows the voltage recovery of a Rayovac BR2325 coin cell after a 5 second short circuit which would typically occur in the wave soldering process.

BR2325 Voltage Recovery after 5 Second Short

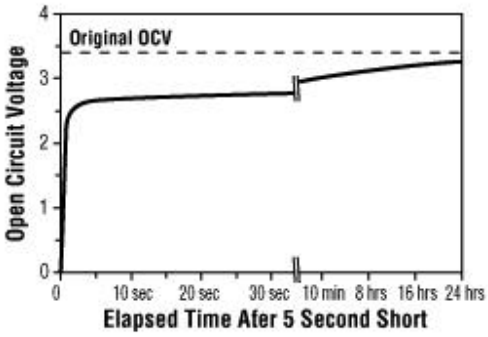

Figure 11

K. Leakage Resistance

The electrolyte in Lifex batteries is based on an organic solvent instead of a corrosive alkaline or acidic solution found in most conventional batteries. This greatly improves the cell's leakage resistance and guards against the negative effects caused by leakage.

L. Orientation

Since Rayovac batteries use solid active components, the performance characteristics described are obtained regardless of the installation position.

Notice

This publication is furnished only as a guide. It is the user's responsibility to determine suitability of the products described for the user's purpose (even if the use is described herein) and to take precautions for protection against any hazards attendant to the handling and use of the products. Rayovac recommends prospective users test each application. The battery products and arrangements described herein may be covered by patents owned by Rayovac or others. Neither this disclosure nor the sale of products by Rayovac conveys any license under patent claims covering combinations of battery products with other elements or devices. Rayovac does not assume liability for patent infringement arising from any use of the products by the purchaser.

The technical data contained herein is not designed to be the basis for specifications. Rayovac's Quality Assurance Department can furnish data that can serve as the basis for specifications.

Worldwide Sales & Marketing Offices

RAYOVAC CORPORATION
World Headquarters
Technical/OEM Division
P.O. Box 44960
Madison, WI 53744-4960
Tel. (608) 275-4694
Fax (608) 275-4973
www.rayovac.com

RAYOVAC CANADA
5448 Timberlea Bouldvard
Mississauga, Ontario L4W 2T7
Canada
Tel. (416) 624-4448
Fax (416) 629-2571

RAYOVAC U.K.
Galleon House
King Street
Maidstone, Kent ME14 18G
England
Tel. 011-44-622-688331
Fax 011-44-622-685523

RAYOVAC FAR EAST LTD.
Room 720-723 Hollywood Plaza
610 Nathan Road
Mongkok Kowloon, Hong Kong
Tel. 011-852-782-2343
Fax 011-852-782-4091

RAYOVAC DISTRIBUTOR
Dae Dong Electronics Co. Ltd.
Chong-Gye A P T 710
205 Sanlim-Dong, Chung-Ku
Seoul, Korea
Tel. 011-82-2-272-7181 (7163)
Fax 011-82-2-274-2549

Conversion Chart

INCHES	MILLIMETERS	INCHES	MILLIMETERS
0.025	0.64	**0.223**	5.66
0.026	0.66	**0.225**	5.72
0.030	0.76	**0.250**	6.35
0.050	1.27	**0.283**	7.19
0.080	2.03	**0.300**	7.62
0.094	2.39	**0.303**	7.70
0.098	2.49	**0.317**	8.05
0.108	2.74	**0.336**	8.53
0.110	2.79	**0.340**	8.64
0.114	2.90	**0.366**	9.30
0.120	3.05	**0.380**	9.65
0.130	3.30	**0.400**	10.16
0.143	3.63	**0.492**	12.50
0.150	3.81	**0.640**	16.26
0.151	3.84	**0.732**	18.59
0.181	4.60	**0.740**	18.80
0.203	5.16	**0.747**	18.97

BR1225R18	BR1225SM
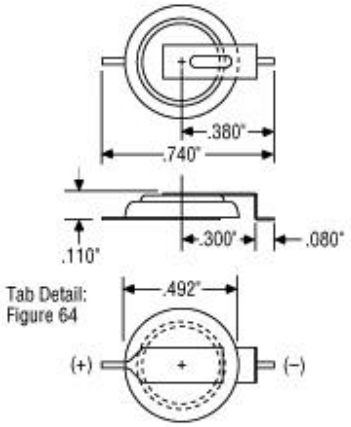	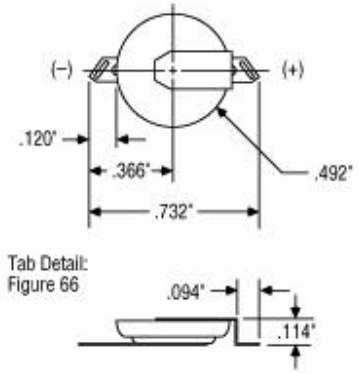
Figure 35	Figure 36

BR1225SM2	BR1225SR2
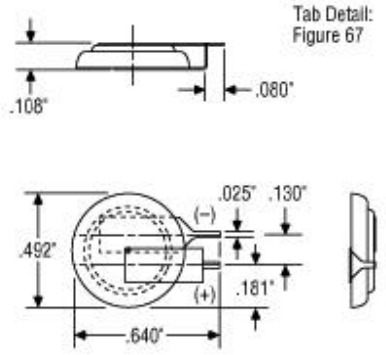	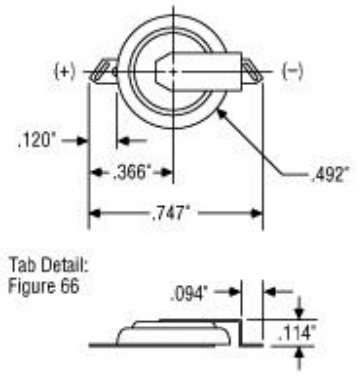
Figure 37	Figure 38

BR1225T2	BR1225T2V
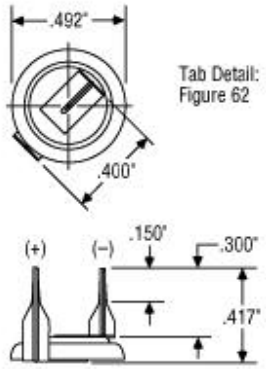	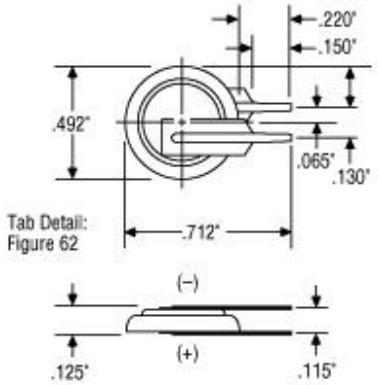
Figure 39	Figure 40

BR1225T3H	BR1632
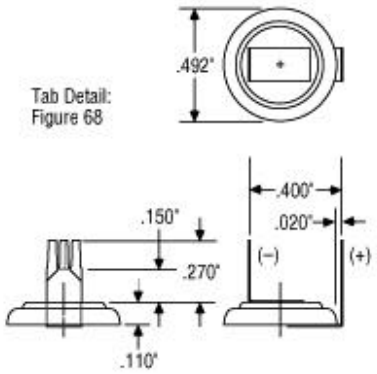	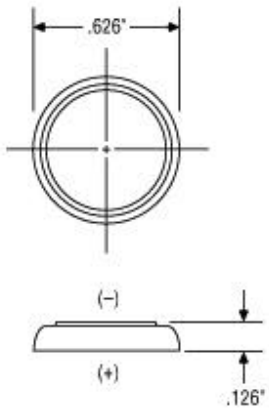
Figure 41	Figure 42

Application Notes & Product Data Sheet

Lifex™ Lithium Coin Cells & FB Encapsulated Lithium Coin Cells - Part 4

X. Product Availability & Cross Reference Table

Stock Number	Description	Inter-changeable Numbers	Figure Numbe r	Packaging	Units per Card	Quan.	Weight (lbs)	Cubic Feet
BR1225	3.0-volt, 50 mAh LIFEX™ cell	BR1225	31	Carded	3	18	22	..01
BR1225-B	3.0-volt, 50 mAh LIFEX cell	BR1225	31	Bulk	-	4,640	13.85	.58
BR1225H2R-B	BR1225 with 2 Tabs	-	32	Bulk	-	800	4.00	.30
BR1225MT2-B	BR1225	-	33	Bulk	-	2,700	7.50	.30
BR1225RT2-B	BR1225R with 2 Short Tabs	-	34	Bulk	-	2,700	7.50	.30
BR1225R18-B	BR1225	-	35	Bulk	-	1,540	4.76	.30
BR1225SM-B	BR1225 Surface Mount	-	36	Bulk	-	2,700	7.68	.30
BR1225SM2-B	BR1225 Surface Mount	-	37	Bulk	-	1,650	5.65	.30
BR1225SR2-B	BR1225	-	38	Bulk	-	1,540	4.76	.30
BR1225T2-1	BR1225 with 2 Tabs	BR1225-1HB	39	Carded	1	100	1.83	.14
BR1225T2-B	BR1225 with 2 Tabs	BR1225-1HB	39	Bulk	-	800	4.00	.30
BR1225-1VB	BR1225 with 2 Tabs - Vertical Mount	BR1225T2V-1	40	Carded	1	100	1.83	.14
BR1225T2V-B	BR1225 with 2 Tabs - Vertical Mount	BR1225-1VB	40	Bulk	-	2,340	7.45	.30
BR1225T3H-B	BR1225 with 2 Tabs , 3 Stands - Horozontal Mount	-	41	Bulk	-	800	4.00	.30
BR1632-B	3.0-volt, 130 mAh LIFEX™ cell	-	42	Bulk	-	3,520	16.24	.58
BR1632DK2-B	BR1632	-	43	Bulk	-	720	6.25	.30
BR1632T2-B	BR1632 with 2 Tabs	-	44	Bulk	-	750	5.11	.49
BR1632T3L-B	BR1632 with 2 Tabs, 3 Stands	-	45	Bulk	-	800	5.57	.49
BR2016	3.0-volt, 70 mAh LIFEX™ cell	BR2016	46	Carded	3	18	.22	.01
BR2016-B	3.0-volt, 70 mAh LIFEX™ cell	BR2016	46	Bulk	-	2,000	10.00	.50
BR2032-B	3.0-volt,195 mAh LIFEX cell	BR2032	47	Bulk	-	2,560	17.00	.58
BR2032T2-B	BR2032 with 2 Tabs	BR2032-1HE1	48	Bulk	-	750	7.73	.49
BR2032T2K-B	BR2032 with 2 Tabs	BR2032-1HSE	49	Bulk	1	800	7.33	.58
BR1225T2-B	BR2032 with 2 Tabs, 3 Stands	BR2032-1GS	50	Bulk	-	750	7.92	.49
BR1225-1VB	BR2032 with 3 Stands - Vertical	BR2032-1GV	51	Bulk	1	750	8.07	.48

*Suffix "-B" designates bulk packaged.
**Height difference - closest equivalent

Stock Number	Description	Inter-changeable Numbers	Figure Numbe r	Packaging	Units per Card	Quan.	Weight (lbs)	Cubic Feet
BR2325	3.0-volt, 180 mAh LIFEX cell	BR2325	52	Carded	3	18	.22	.01
BR2325-B	3.0-volt, 180 mAh LIFEX cell	BR2325	52	Bulk	-	2,000	18.00	.50
BR2325P2-B	BR2325 with 2 Pins		53	Bulk	-	750	8.50	.49
BR2325T2-1	BR2325 with 2 Tabs	BR2325-1HB, BR2325-1HB	54	Carded	1	100	2.10	.18
BR2325T2-B	BR2325 with 2 Tabs	BR2325-1HB, BR2325-1HB	54	Bulk	-	750	8.50	.49
BR1225R18-B	BR2325 with 2 Tabs, 3 Stands	-	55	Bulk	-	750	8.25	.49
BR1225SM-B	BR2325 with 2 Tabs - Vertical	BR2325-1VG	56	Bulk	-	840	8.75	.47
BR2335	3.0-volt, 300 mAh LIFEX cell	BR2330	57	Carded	3	18	.22	.01
BR2335-B	3.0-volt, 300 mAh LIFEX cell	BR2330	57	Bulk	-	2,800	24.28	.58
BR2335SM-B	BR2335 Surface Mount	-	58	Bulk	-	800	8.48	.30
BR2335T2-1	BR2335 with 2 Tabs	BR2330-1HE	59	Carded	1	100	2.10	.18
BR2335T2-B	BR2335 with 2 Tabs	BR2330-1HE	59	Bulk	-	750	9.35	.49
BR2335T3L-1	BR2335 with 2 Tabs, 3 Stands	BR2330-1GU	60	Carded	1	100	2.22	.18
BR2335T3L-B	BR2335 with 2 Tabs , 3 Stands	BR2330-1GU	60	Bulk	-	750	9.35	.49
BR2335T3V-1	BR2335 with 2 Tabs - Vertical	BR2330-1VG	61	Carded	1	100	1.44	.14
BR2335T3V-B	BR2335 with 2 Tabs - Vertical	BR2330-1VG	61	Bulk	-	735	8.62	.47

*Suffix "-B" designates bulk packaged.

X. Lifex FB™ Lithium Batteries

Rayovac Lifex FB batteries consist of two lithium carbon-monofluoride coin cells encapsulated within a glass filled polyester molded housing. The FB series of batteries are configured to allow for series or parallel interconnection between the cells.

Lifex FB batteries utilize Rayovac Lifex™ lithium carbon-monofluoride technology to assure the greatest reliability at very wide temperatures and the lowest self-discharge rate.

A. Features

- Meets or exceeds typical hermetically sealed battery shelf life vs. temperature capability Operating Temperature Range:
  -40°C to + -100°C (-40°F to +212°F)
- PCB mountable, wave solderable, and process tolerant
- Inherently safe chemistry
- Application flexibility
- Robotically placeable

B. Typical Applications

- Time/data protection
- Industrial control
- Communication equipment
- Portable Instruments

C. Specification Table

Part Number	Nominal Voltage (volts)	Nominal Capacity (mAh)	Nominal Pulse Capacity (mA*)	Width	Length	Height **	Weight	Volume
FB1225H2	3.0 Parallel 6.0 Series	100 Parallel 50 Series	16 Parallel 8 Series	15.9 mm (0.625")	15.9 mm (0.625")	10.3 mm (0.405")	4.2 gm (0.15 oz.)	2.00 cc (6.12 in_)
FB2325H2	3.0rallel 6.0 Series	360 Parallel 180 Series	20 Parallel 10 Series	25.4 mm (1.000")	25.4 mm (1.000")	10.8 mm (0.425")	11.9 g (0.42 oz.)	6.14 cc (0.375 in_)

* Consult Rayovac Applications Engineering for assistance in determining pulse capability for your application.

**Height above circuit board.
NEDA and IEC numbers have not been assigned to Lifex FB products.

D. Typical Discharge Curves

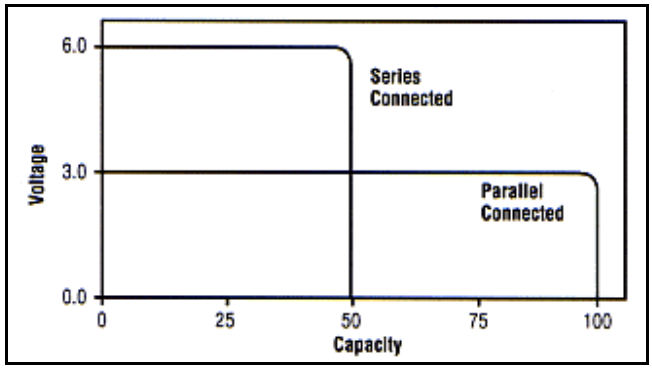

Figure 70

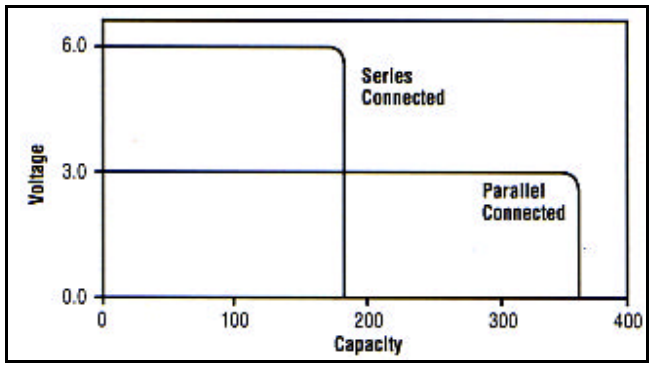

Figure 71

E. Dimensional Drawing

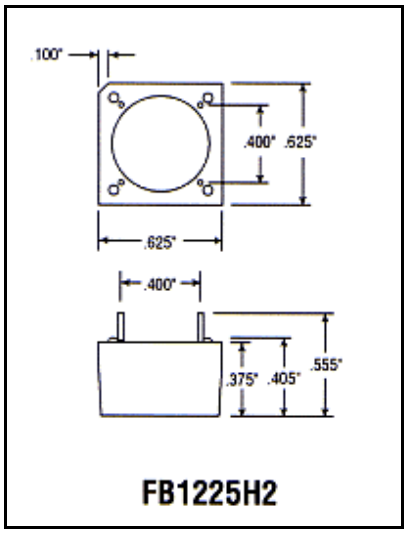

Figure 72

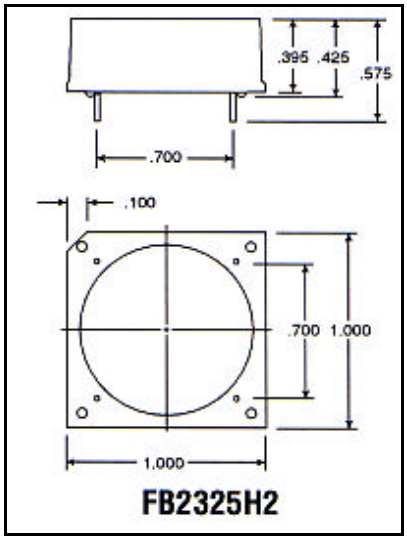

Figure 73

Conversion Chart

INCHES	MILLIMETERS
.100	2.5
.395	10.0
.375	9.5
.400	10.2
.405	10.3
.425	10.8
.555	14.1
.575	14.6
.625	15.9
.700	17.8
1.000	25.4

IX. Relex™ Socket

The Relex RH23H2 is a printed circuit board mountable battery socket for use with Rayovac's FB2325H2 battery. This device provides excellent component retention and a gas tight, reliable electrical contact. Its self-orienting design assures proper polarity installation without desoldering or the use of special tools.

A. Features

- Improved contact reliability over conventional holders
- Printed Circuit Board (PCB) mountable, wave solderable, and process tolerant
- Molded in standoff for thorough post reflow cleaning
- Excellent battery retention in shock and vibration
- Tin on tin, gas-tight spring contacts

B. Dimensional Drawings

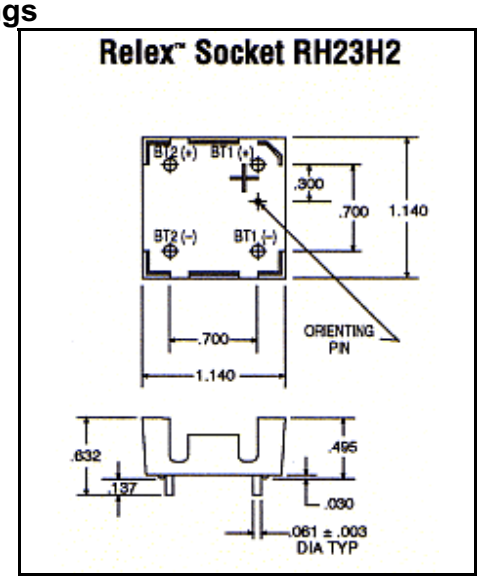

Figure 74

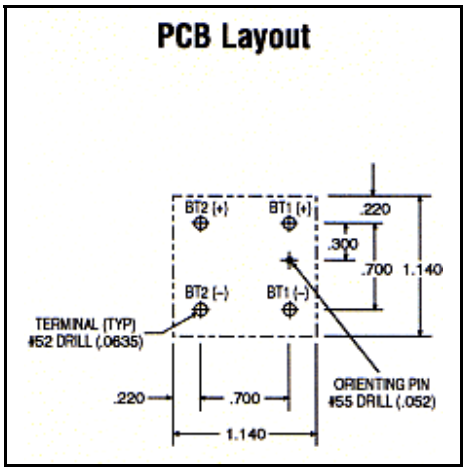

Figure 75

Conversion Chart

INCHES	MILLIMETERS
.003	0.1
.030	0.8
.061	1.5
.137	3.5
.220	5.6
.300	7.6
.495	12.6
.632	16.1
.700	17.8
1.140	28.9

XII. Recommended Storage, Handling and Disposal Procedures

A. Storage and Date Codes

Lifex coin cells and Lifex FB batteries are electrochemical devices which depend upon internal chemical reactions to produce electrical power. These reactions are accelerated by high temperatures and retarded by low temperatures. Therefore, to minimize power loss during storage, batteries should be stored at ambient temperature, 21°C (70°F). Storage at lower temperatures is not necessary nor recommended due to the possibility of shorting from moisture condensation.

To maximize battery power, the following storage procedures should be observed:

1. Rotate inventory. Maintain a first in, first out method of stock storage and usage. The manufacture date of Rayovac cells and batteries are identified by a four digit Julian date code stamped on the individual products.

2. Avoid storage in high temperature areas. Make sure that cells and batteries are stored away from hot air vents, radiators, motors, and equipment that generates heat. Avoid storage near windows or skylights where the sun can generate heat.

B. General Precautions

- Lifex coin cells and Lifex FB batteries should not be inserted improperly, recharged, or disposed of in fire
- Take precautions to insure correct polarity of the battery in the device
- Recharging of batteries may cause leakage
- Never short-circuit, disassemble, or subject batteries to excessive heat
- Never expose lithium to moisture
- Do not solder directly to battery case
- Improper welding can damage internal components and impair battery performance

C. Handling and Shipping

Batteries are vulnerable to short circuiting if not handled properly. Cell types which have their positive and negative terminations in close proximity to each other, or tabbed cells, are particularly susceptible to short circuiting if not handled properly. In prototyping and assembly operations, care should be taken to avoid placing these products on conductive antistatic mats. Rayovac packaging engineers design all packaging to assure that Rayovac batteries can be shipped and stored in their original cartons without damage.

To avoid potential short circuit and shipping damage situations:

1. Always store the batteries in the trays and/or cartons in which they were shipped. Whenever possible, reship the batteries in theiroriginal trays and/or cartons.

2. Rayovac offers individually packaged cells and batteries, designated by a "-1" suffix on the part number. This allows for the safe handling and transport of parts in smaller quantities.

3. Never place or dump batteries on conducting surfaces such as metal tables or shelves.

4. Never ship batteries or completed circuit boards with installed batteries in anti-static bags as the bags are conductive and will short out the battery.

5. Use caution with measuring equipment. Insulate metal micrometers and calipers with tape to avoid short circuiting batteries during dimensional checks.

D. Transportation Regulations

Transportation of lithium batteries is regulated by the U.S. Department of Transportation (DOT), the International Civil Aviation Organization (ICAO) and the International Air Transport Association (IATA). For Lifex™ solid cathode lithium batteries, the quantity of lithium metal is the key determinant that defines the applicable regulations and requirements.

All of Rayovac's Lifex lithium coin cells meet the following requirements:

D.O.T. Title 49 Code of Federal Regulations (49 CFR 173.185F)

Rayovac Lifex lithium coin cells contain no more than 0.5 gram of lithium metal and Rayovac Lifex FB™ lithium batteries contain no more than 1.0 gram of lithium metal. They are authorized for all modes of transportation when packaged in strong containers that separate the batteries to prevent shorting, or when the batteries are installed in electronic equipment.

2. ICAO and IATA Special Provision A45

Rayovac Lifex lithium solid cathode coin cells contain no more than 0.5 gram of lithium metal and Rayovac Lifex FB lithium solid cathode batteries contain no more than 2.0 grams of lithium metal. They are authorized for transportation on passenger and cargo aircraft when packaged in strong containers that separate the batteries to prevent shorting, or when the batteries are installed in electronic equipment.

The table below summarizes the specific requirements for each agency.

Transportation Regulations

	United States	International
Regulatory Agency	U.S. Department of Transportation (DOT)	1. International Civil Aviation Organization(ICAO) 2. International Air Transport Association (IATA)
Regulation **Authorized Modes of Transportation**	Title 49 CFR 173.185F All	Special Provision A45 Passenger and Cargo Aircraft
Special Packaging	Individual cells and batteries to be separated to prevent short circuiting or be installed in electronic equipment.	Individual cells and batteries to be separated to prevent short circuiting or be installed in electronic equipment.
Hazard Class and Required Shipping Name	None	None
Special Labels Required	None	None
Lithium Metal Limits	Cells: 0.5 gram Batteries: 1.0 gram	Cells: 0.5 gram Batteries: 2.0 grams

E. Disposal

This statement is provided as a service to those who may want information concerning the safe disposal of waste Lifex (lithium/carbon-monofluoride) battery products. These products may be distinguished from other battery products by the presence of the letters BR or FB in the product designation, and are manufactured in a disk or "coin" shape and squaremodules.

This information does not apply to any other lithium chemistry or lithium carbon-monofluoride products in other form factors.

United States Environmental Protection Agency (USEPA):

Waste Lifex™ coin cells are neither listed nor exempted from the USEPA hazardous waste regulations. Waste Lifex products can be considered reactive hazardous waste if there is a significant amount of unreacted, or unconsumed lithium remaining. This potential problem may be avoided by discharging waste cells and batteries prior to disposal. One good method for doing this is to place small quantities of Lifex coin cells into a metal container with sufficient graphite to cover and surround the individual cells. This procedure will discharge the cells in two weeks to the point where no reactive lithium remains. The cells and the graphite may then be disposed of as nonhazardous waste in an ordinary landfill under Federal regulations.

Exemption for Lifex FB™ Products

Rayovac's Lifex FB battery series are two coin cells which are encapsulated into an epoxy-sealed unit. There is a USEPA exemption available from hazardous waste regulations for these products. USEPA Office of Solid Waste and Emergency Response Directive 9443.05 (83) provides that such batteries manufactured to prevent disintegration after disposal need only pass a 30-day salt-water immersion test. If no evidence of leakage exists after 30 days, they are considered non-hazardous waste and may be disposed with ordinary waste.

Other Disposal Methods

If the waste generator elects to manage the waste Lifex or Lifex FB battery product as hazardous waste, one licensed facility known for treating and disposing of lithium battery hazardous waste is BDT, Inc., Clarence, New York. Rayovac's Applications Engineering can provide assistance with BDT's waste documentation forms.

Cautions

Under Federal law, waste generators are responsible for their wastes. Be sure to check your state and local regulations to be sure that they are not more restrictive than the Federal regulations. Always remember that waste battery products may still have considerable energy remaining in them. Handle such products with care and in accordance with applicable DOT and IATA regulations.

F. Soldering

Lifex component class lithium batteries are suitable for direct soldering onto printed circuit boards (PCB). A welded tab or pin soldered to a PCB will ensure the highest contact reliability available. Observe these precautions to assure life-of-product reliability:

1. Hand Soldering

Never solder directly to cell cases. The resultant heat will cause permanent internal damage to the cell. Soldering of tabbed batteries should be accomplished with a low wattage soldering iron by applying heat justlong enough to achieve a good connection.

2. Wave Soldering

During the period when the battery tabs or pins are in the solder bath, the battery is short circuited. If this period is kept to under 5 seconds the battery capacity loss will be minimized. Following a short circuit the battery voltage will recover to above 2.5 volts almost immediately while full recovery to its final working voltage may take hours or even days. This characteristic must be taken into account when making electrical measurements on recovering batteries or when establishing manufacturing pass/fail points.

Refer to Short Circuit Recovery.

3. Surface Mount Technology

Rayovac offers a full line of surface mount lithium cells configurations. These cells are indicated by the suffix "SM" or "SR" in the stock number. The surface mount batteries have configurations that allow for easy board mounting.

Current Lifex™ lithium products are not compatible with Surface Mount Technology (SMT) soldering processes due to the extreme temperatures required for reflow. Batteries should be added as a secondary operation. Mixed technology boards that utilize both SMT and traditional through-hole components have been successfully fabricated.

G. Washing

It is important that PCB wash techniques are compatible with Lifex batteries. The seals of these batteries are polypropylene and solvents that attack this material should be avoided. The most common freon types and deionized water have shown to be acceptable cleaning solvents. Rayovac should be consulted if there is any possibility of process related battery damage.

XIII. U.L. Component Recognition

Rayovac lithium batteries have been accepted by Underwriters Laboratories under their Component Recognition Program and carries U.L. File Number MH 12542. All recognized lithium batteries can be identified by the symbol located on the data sheet.

For use in UL listed devices, these lithium batteries must be used in accordance to the following U.L. conditions of acceptability.

A. Conditions of Acceptability

The use of these cells may be considered generally acceptable under the conditions given below:

1. The cells are identified with producer's name and model designation on the cell.

2. These cells are intended for use as components in devices where servicing of the circuitry involving the cells and replacement of the lithium cells will be done by a trained technician.

3. These cells are intended for use at ordinary temperatures where anticipated high temperature excursions are not expected to exceed 100°C (212°F).

4. These cells can be used in series up to a maximum of four cells of the same model number. When used in series, they should all be replaced at the same time using fresh cells only. These cells should not be connected in series with any other (other than the allowed number of cells in series) power source that would increase the forward current through the cells.

5. The circuit for these cells should include one of the following:

   A. Two suitable diodes or the equivalent in series with the cells to prevent any reverse (charging) current. The second diode is used to provide protection in the event that one should fail. Quality control, or equivalent procedures shall be established by the device's manufacturer to insure the diode polarity is correct for each unit.

   _or_

   B. A blocking diode or equivalent to prevent reverse (charging) current, and in the event of diode failure, the cell shall be further protected against reverse (charging) current in excess of the values shown in chart to the right. The measurement of this current shall include appropriate abnormal tests.

B. Protective Battery Circuits

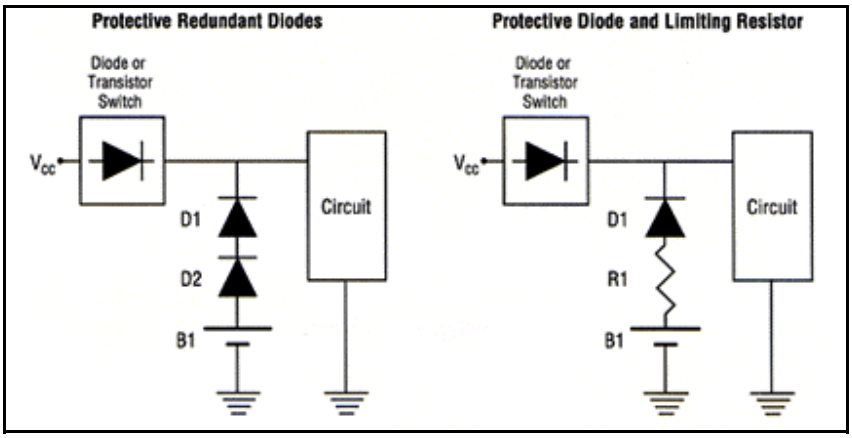

Maximum Reverse Charging Currents for Rayovac Lifex Cells

Cell Models	Maximum Current (mA)
BR1225	3.0
BR1632	3.0
BR2016	4.0
BR2032	4.0
BR2325	5.0
BR2335	5.0
FB2325	5.0

Silver-Oxide Cells

Rayovac offers a complete line of silver-oxide cells that are made in the U.S.A.

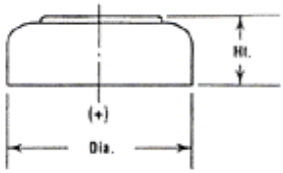

Silver Oxide Cells

Rayovac Model Number	ANSI/ NEDA	IEC	Drain	Rated Load KΩ	Nominal Capacity (mAh)	App. Vol. (cm3)	Maximum Dimension Millimeter s dia. x ht.	Maximum Dimensio nInches dia. x ht.	App. Weight (grams)
361	1173SO	SR58	high	30	22	.10	7.9x2.1	.311x.083	.44
396	1163SO	SR59	high	45	35	.13	7.9x2.7	.311x.106	.56
392	1135SO	SR41	high	15	35	.17	7.8x3.6	.307x.142	.61
312G	1179SO	SR41	ultra high	1.5	38	.17	7.8x3.6	.307x.142	.61
393	1137SO	SR48	high	15	90	.26	7.8x5.4	.307x.212	1.04
13G	1181SO	SR48	ultra high	1.5	85	.26	7.8x5.4	.307x.212	1.04
370	1188SO	SR69	high	45	35	.15	9.5x2.1	.374x.083	.60
399	1165SO	SR57	high	20	53	.19	9.5x2.7	.374x.106	.79
391	1160SO	SR55	high	15	43	.22	11.6x2.1	.457x.083	.83
389	1138SO	SR54	high	15	85	.32	11.6x3.0	.457x.118	1.21
386	1133SO	SR43	high	6.5	120	.44	11.6x4.2	.457x.165	1.56
357	1131SO	SR44	high	6.5	190	.57	11.6x5.35	.457x.211	2.22
675G	1184SO	SR44	ultra high	.62	190	.57	11.6x5.35	.457x.211	2.22
317	1185SO	NA	low	70	11	.04	5.8x1.65	.228x.065	.18
379	1191SO	NA	low	70	14	.06	5.8x2.15	.228x.085	.23
319	1186SO	NA	low	70	16	.07	5.8x2.7	.228x.106	.26
321	1174SO	SR65	low	70	14	.06	6.8x1.65	.268x.065	.24
364	1175SO	SR60	low	70	19	.08	6.8x2.15	.268x.085	.33
377	1176SO	SR66	low	45	26	.09	6.8x2.6	.268x.102	.40
315	1187SO	SR67	low	70	16	.08	7.9x1.65	.311x.065	.32
362	1158SO	SR68	low	70	22	.10	7.9x2.1	.311x.083	.44
397	1164SO	SR59	low	45	35	.13	7.9x2.7	.311x.106	.56
329	NA	NA	low	20	36	.15	7.9x3.1	.311x.122	.60
384	1134SO	SR41	low	15	35	.17	7.8x3.6	.307x.142	.61
373	1172SO	SR68	low	45	24	.12	9.5x1.65	.374x.065	.44
371	1171SO	SR69	low	45	35	.15	9.5x2.1	.374x.083	.61
395	1162SO	SR57	low	20	53	.19	9.5x2.7	.374x.106	.81
394	1161SO	SR45	low	15	64	.26	9.5x3.6	.374x.142	.96
381	1170SO	SR55	low	20	43	.22	11.6x2.1	.457x.083	.80
390	1159SO	SR54	low	15	85	.32	11.6x3.0	.457x.118	1.21
344	1139SO	SR42	low	15	105	.38	11.6x3.6	.457x142	1.35

*Rayovac's silver cells meet ANSI and IEC specifications.

XIV. Additional Technical Products from Rayovac

Computer Clock Batteries

Rayovac's alkaline computer clock batteries are optimized for low current, long life applications. They are specifically designed as high reliability, low cost batteries for 80286, 80386, and 80486 system real time clock back-up. Rayovac's computer clock batteries are specified by over 40 microcomputer system builders.

- Economical solution for real time clock back-up
- Compatible with major types of PC chipsets
- Shelf life consistent with service life
- Non-hazardous materials _ meet EC'92 regulations
- Inherently charge tolerant (with 5.0 volt supply)
- Velcro mount for easy installation
- Gold contacts for greatest reliability

Stock No.	Description
844	4.5 Volt with 4 Pin Connector. For IBM®PC-AT and compatibles; 1200 mAh of capacity
840	4.5 Volt with 4 Pin Connector. For when space is limited; 600 mAh of capacity

---

RENEWAL® Reusable Alkaline™ Batteries

Rayovac's patented RENEWAL batteries combine the high performance attributes of alkaline manganese with the cost and environmental benefits of a reusable system. RENEWAL is available in bulk and carded.

- Reusable 25 times or more with Rayovac POWER STATION® Charger
- Hold their charge in storage up to five years
- Come precharged and ready to use
- No memory problems
- Better for the environment

Stock No.	Description
713-2	RENEWAL Reusable Alkaline D Size Carded 2 Pack
714-2	RENEWAL Reusable Alkaline C Size Carded 2 Pack
715-4	RENEWAL Reusable Alkaline AA Size Carded 4 Pack
724-4	RENEWAL Reusable Alkaline AAA Size Carded 4 Pack
PS1	RENEWAL POWER STATION 4 Position AA/AAA
PS2	RENEWAL POWER STATION 8 Position AA/AAA/C/D

Alkaline Batteries

Rayovac offers a complete line of high performance zero mercury added alkaline batteries that are made in the U.S.A. Rayovac alkaline batteries are available in both carded and multi-pack.

Stock No.	Description
813	1.5 Volt D Size
814	1.5 Volt C Size
815	1.5 Volt AA Size
824	1.5 Volt AAA Size
A1604	9 Volt Size

Notice

This publication is furnished only as a guide. It is the user's responsibility to determine suitability of the products described for the user's purpose (even if the use is described herein) and to take precautions for protection against any hazards attendant to the handling and use of the products. Rayovac recommends prospective users test each application. The battery products and arrangements described herein may be covered by patents owned by Rayovac or others. Neither this disclosure nor the sale of products by Rayovac conveys any license under patent claims covering combinations of battery products with other elements or devices. Rayovac does not assume liability for patent infringement arising from any use of the products by the purchaser.

The technical data contained herein is not designed to be the basis for specifications. Rayovac's Quality Assurance Department can furnish data that can serve as the basis for specifications.

Worldwide Sales & Marketing Offices

RAYOVAC CORPORATION
World Headquarters
Technical/OEM Division
P.O. Box 44960
Madison, WI 53744-4960
Tel. (608) 275-4694
Fax (608) 275-4973
www.rayovac.com

RAYOVAC CANADA
5448 Timberlea Bouldvard
Mississauga, Ontario L4W 2T7
Canada
Tel. (416) 624-4448
Fax (416) 629-2571

RAYOVAC U.K.
Galleon House
King Street
Maidstone, Kent ME14 18G
England
Tel. 011-44-622-688331
Fax 011-44-622-685523

RAYOVAC FAR EAST LTD.
Room 720-723 Hollywood Plaza
610 Nathan Road
Mongkok Kowloon, Hong Kong
Tel. 011-852-782-2343
Fax 011-852-782-4091

RAYOVAC DISTRIBUTOR
Dae Dong Electronics Co. Ltd.
Chong-Gye A P T 710
205 Sanlim-Dong, Chung-Ku
Seoul, Korea
Tel. 011-82-2-272-7181 (7163)
Fax 011-82-2-274-2549

Version : 1.5

TECHNICAL SPECIFICATION

MODEL NO. : PD064VT2

☐Customer's Confirmation

Customer _____

Date _____

By _____

☐PVI's Confirmation

Confirmed By _____

Prepared By _____

PRIME VIEW INTERNATIONAL CO.,LTD.
3,LI SHIN RD. 1,SCIENCE-BASED INDUSTRIAL PARK,HSINCHU,TAIWAN,R.O.C.
http://www.pvi.com.tw

Date : Apr 12, 2002

This technical specification is subject to change without notice.
Please return 1 copy with your signature on this page for approval.

The information contained herein is the exclusive property of Prime View International Co., Ltd. and shall not be distributed, reproduced, or disclosed in whole or in part without prior written permission of Prime View International Co., Ltd.

TECHNICAL SPECIFICATION

CONTENTS

NO.	*ITEM*	*PAGE*
-	Cover	1
-	Contents	2
1	Application	3
2	Features	3
3	Mechanical Specifications	3
4	Mechanical Drawing of TFT-LCD module	4
5	Input / Output Terminals	6
6	Absolute Maximum Ratings	7
7	Electrical Characteristics	7
8	Power On Sequence	13
9	Optical Characteristics	14
10	Handling Cautions	17
11	Reliability Test	18
12	Indication of Lot Number Label	18
13	Block Diagram	19
14	Packing Diagram	20
-	Revision History	21

The information contained herein is the exclusive property of Prime View International Co., Ltd. and shall not be distributed, reproduced, or disclosed in whole or in part without prior written permission of Prime View International Co., Ltd.

1. Application

This product applies computer peripheral, industrial meter, image communication, web-pad, e-boobs and multi-media.

2. Features

. Pixel in stripe configuration

. Slim and compact

. Display Colors : 262,144 colors

. Viewing Direction : 6 o'clock

. Slim module design for mobile electronics device application

3. Mechanical Specifications

Parameter	Specifications	Unit
Screen Size	6.4 (diagonal)	inch
Display Format	640×R, G, B×480	dot
Active Area	129.6(H)×97.44 (V)	mm
Dot Pitch	0.0675 (H)×0.203 (V)	mm
Pixel Pitch	0.203 (H)×0.203 (V)	mm
Pixel Configuration	Stripe	
Outline Dimension	See Mechanical Drawing	mm
Weight	165±10	g

The information contained herein is the exclusive property of Prime View International Co., Ltd. and shall not be distributed, reproduced, or disclosed in whole or in part without prior written permission of Prime View International Co., Ltd.

4. Mechanical Drawing of TFT-LCD Module

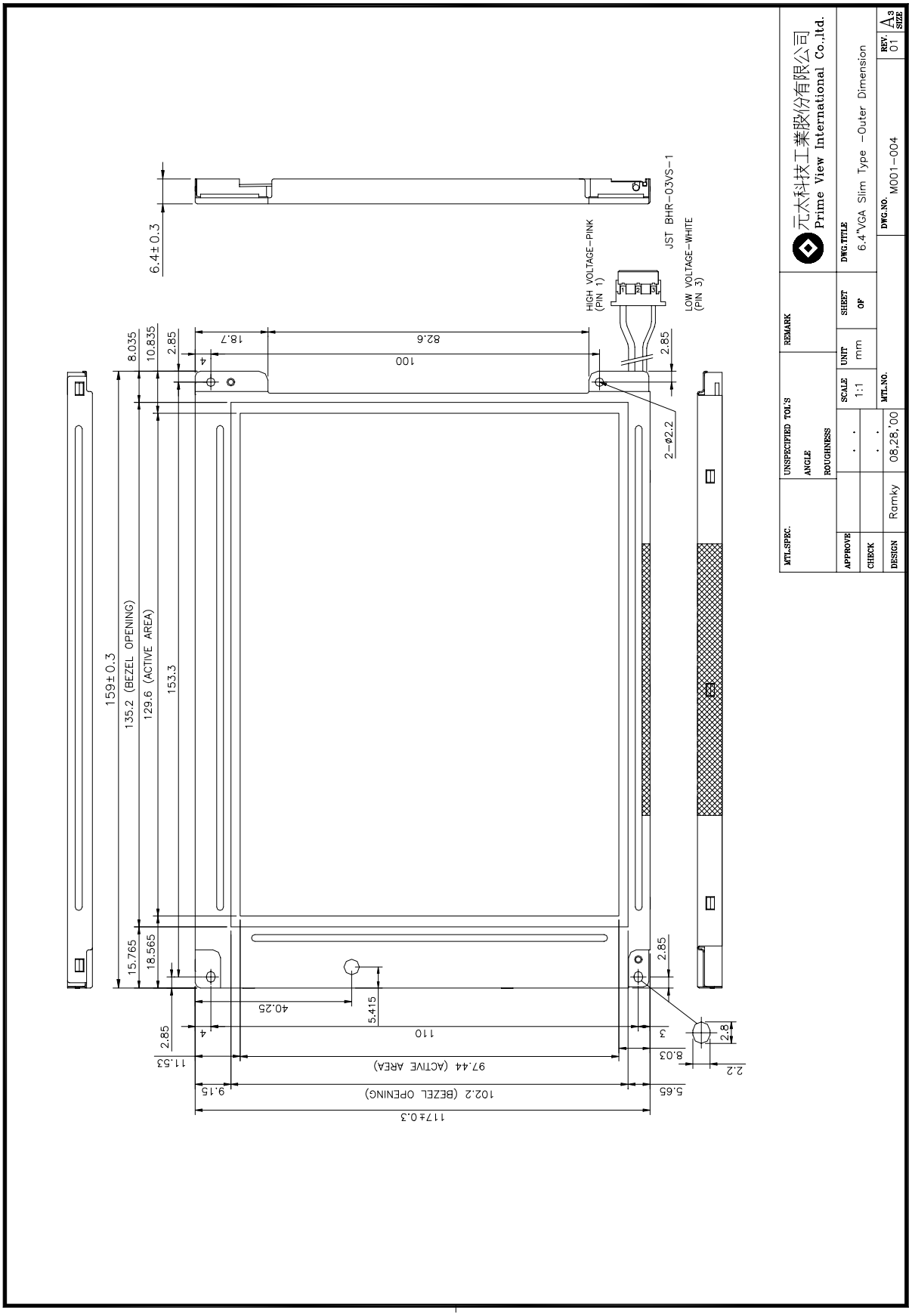

The information contained herein is the exclusive property of Prime View International Co., Ltd. and shall not be distributed, reproduced, or disclosed in whole or in part without prior written permission of Prime View International Co., Ltd.

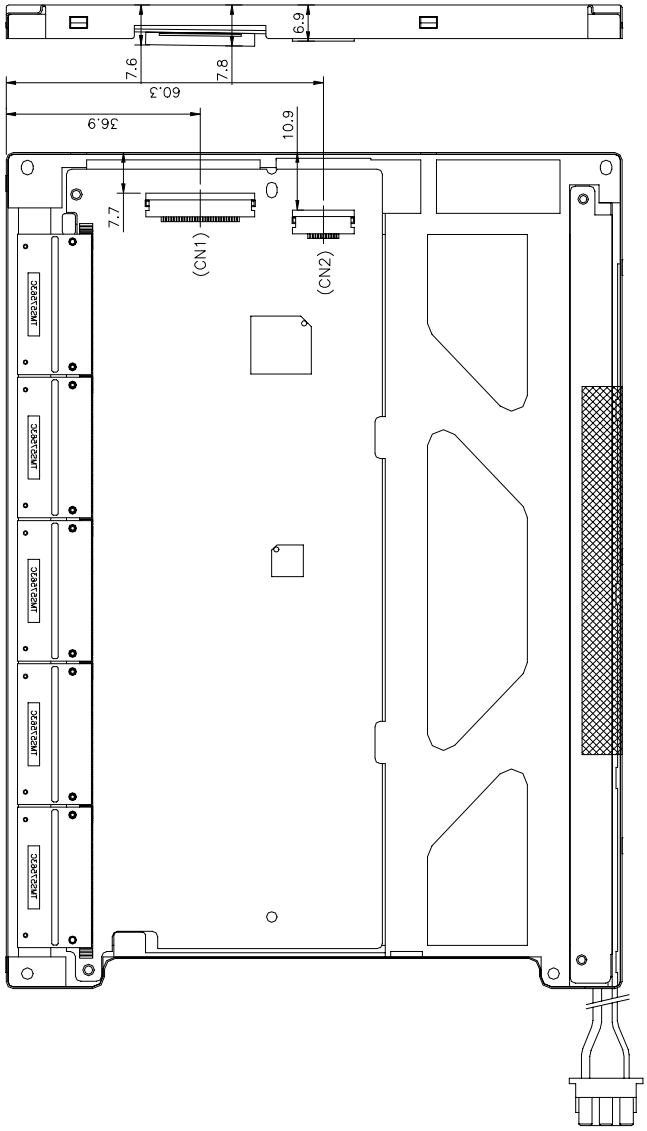

NOTE:
1).CN1:ELCO, 6210-30P
2).CN2:JST FLH-RSM1-12PIN

MTL.SPEC.	UNSPECIFIED TOL'S	REMARK	元太科技工業股份有限公司 Prime View International Co.,ltd.				
	ANGLE						
	ROUGHNESS						
APPROVE	. .	SCALE 1:1	UNIT mm	SHEET	OF	DWG.TITLE 6.4"VGA Slim Type -Outer Dimension	REV. 01 A3 SIZE
CHECK	. .	MTL.NO.				DWG.NO. M001-004	
DESIGN	Ramky	08.28.'00					

The information contained herein is the exclusive property of Prime View International Co., Ltd. and shall not be distributed, reproduced, or disclosed in whole or in part without prior written permission of Prime View International Co., Ltd.

5. Input / Output Terminals

5-1) TFT-LCD Panel Driving

Connector (1) type : ELCO , 6210-30PIN

Pin No.	Symbol	Function	Remark
1	CLK	Clock Signal for Sampling Image Digital Data	
2	Hsync	Horizontal Synchronous Signal	
3	Vsync	Vertical Synchronous Signal	
4	GND	Ground (0V)	
5	R0	Red Image Data Signal (LSB)	
6	R1	Red Image Data Signal	
7	R2	Red Image Data Signal	
8	R3	Red Image Data Signal	
9	R4	Red Image Data Signal	
10	R5	Red Image Data Signal (MSB)	
11	GND	Ground (0V)	
12	G0	Green Image Data Signal (LSB)	
13	G1	Green Image Data Signal	
14	G2	Green Image Data Signal	
15	G3	Green Image Data Signal	
16	G4	Green Image Data Signal	
17	G5	Green Image Data Signal (MSB)	
18	GND	Ground (0V)	
19	B0	Blue Image Data Signal (LSB)	
20	B1	Blue Image Data Signal	
21	B2	Blue Image Data Signal	
22	B3	Blue Image Data Signal	
23	B4	Blue Image Data Signal	
24	B5	Blue Image Data Signal (MSB)	
25	GND	Ground (0V)	
26	NC	No connection	
27	VCC	DC +3.3V Power Supply	
28	VCC	DC +3.3V Power Supply	
29	NC	No connection	
30	NC	No connection	

5-2) Backlight driving

Pin No	Symbol	Description	Remark
1	VL1	Input terminal (Hi voltage side)	Wire color : Pink
2	NC	No Connection	
3	VL2	Input terminal (Low voltage side)	Wire Color : White Note 5-1

Note 5-1 : Low voltage side of backlight inverter connects with ground of inverter circuits.

The information contained herein is the exclusive property of Prime View International Co., Ltd. and shall not be distributed, reproduced, or disclosed in whole or in part without prior written permission of Prime View International Co., Ltd.

5-3) Input / Output Connector

A) LCD module connector
ELCO , 6210-30PIN
Down Connector
Pin No. : 30
Pitch : 0.5 mm

B) Backlight Connector
JST BHR-03VS-1
Pin No. : 3
Pitch : 4 mm
Red : High Voltage
White : Low Voltage

6. Absolute Maximum Ratings :

GND=0V, Ta=25℃

Parameters	Symbol	MIN.	MAX.	Unit	Remark
+3.3V Supply Voltage	V_{CC}	-0.3	+4.0	V	
Input Signals Voltage	V_{sig}	-0.3	V_{CC}+0.3	V	Note 6-1
Storage Temperature	T_{stg}	-20	+70	℃	Note 6-2
Operating Temperature	T_{opa}	-0	+60	℃	

Note 6-1 : Input signals include CLK, Hsync, Vsync, R[0:5], G[0:5] and B[0:5].

Note 6-2 : Humidity : 95% RH Max. at Ta ≦ 40℃.
Maximum wet-bulb temperature is at 39 ℃ or less at Ta > 40 ℃.
No condensation.

7. Electrical Characteristics

7-1) Recommended Operating Conditions :

A) Driving for TFT-LCD panel

GND = 0V， Ta = 25 ℃

Parameters		Symbol	Min.	Typ.	Max.	Unit	Remark
+3.3V	Supply Voltage	V_{CC}	+3.15	+3.3	+3.6	V	
	Supply Input Ripple Voltage	V_{CCRP}			0.1	Vp-p	V_{CC}=+3.3V
Input Signals Voltage (High)		V_{IH}	+3.0	+3.3	+3.6	V	
Input Signals Voltage (Low)		V_{IL}	-	0	+0.3	V	

B) Driving for backlight

Ta = 25 ℃

Item	Symbol	Min.	Typ.	Max.	Unit	Remark
Lamp Current	I_L	3	5	7	mA	
Lamp Voltage	V_L	350	390	420	Vrms	
Oscillation	P_L	45	64	80	KHz	
Lamp Life Time		-	20,000	-	Hr	
Kick-off voltage(25℃)	Vs	-	845	1,050	Vrms	
Kick-off voltage(0℃)	Vs	-	1,045	1,250	Vrms	

The information contained herein is the exclusive property of Prime View International Co., Ltd. and shall not be distributed, reproduced, or disclosed in whole or in part without prior written permission of Prime View International Co., Ltd.

7-2) Power Consumption

Parameters	Symbol	Typ.	Max.	Unit	Remark
+3.3V Current Dissipation	I_{CC}	170	200	mA	
Input Signals Current (High)	I_{IH}		100	μA	V_{IH} =+3.3V
Input Signals Current (Low)	I_{IL}		100	μA	V_{IL} =0V
LCD Panel Power Consumption		0.56	0.66	W	Note 7-1
Backlight Power Consumption		1.95	2.10	W	Note 7-2

Note 7-1 : The power consumption of backlight is not included.

Note 7-2 : Backlight lamp power consumption is calculated by $I_L \times V_L$.

7-3) Input / Output signal timing chart

Parameters		Symbol	Min.	Typ.	Max.	Unit	Note
	Frequency	Fc=1/Tc		25.175		MHz	Note 7-3
Clock	High Time	Tckh	10			ns	
	Low Time	Tckl	10			ns	
	Periodic = Line	Thp		31.778		μs	Note 7-3
Hsync				800	1024	clock	Note 7-3
	Pulse Width	Thpw	2	96	200	clock	
	Back Porch	Thbp	2	49	64	clock	
			515	525	1024	line	Note 7-3
Vsync	Pulse Width	Tvpw	1	2		line	
	Back Porch	Tvbp	1	33	64	line	
Data	Setup Time	Tds	10			ns	
	Hold Time	Tdh	10			ns	
	Periodic = Line	Tep		800	1024	clock	
	Pulse Width (H)	Tepw	2	640	800	clock	
Horizontal Display Periodic		Thd	640	640	640	clock	
Hsync-CLK Phase Difference		Thc	10		Tc-10	ns	
Vsync-Hsync Phase Difference		Tvh	1		Thp-1	clock	

Note 7-3 : Tc is the period of sampling clock. In case of low-frequency, the image-flicker may occur.

The information contained herein is the exclusive property of Prime View International Co., Ltd. and shall not be distributed, reproduced, or disclosed in whole or in part without prior written permission of Prime View International Co., Ltd.

7-4) Display Time Range

(1) Vertical Timing :

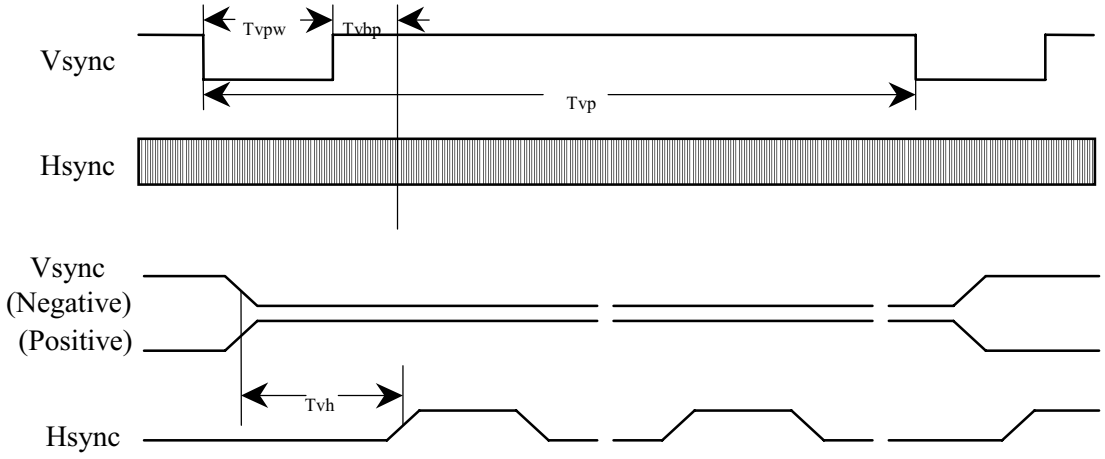

(2) Horizontal Timing :

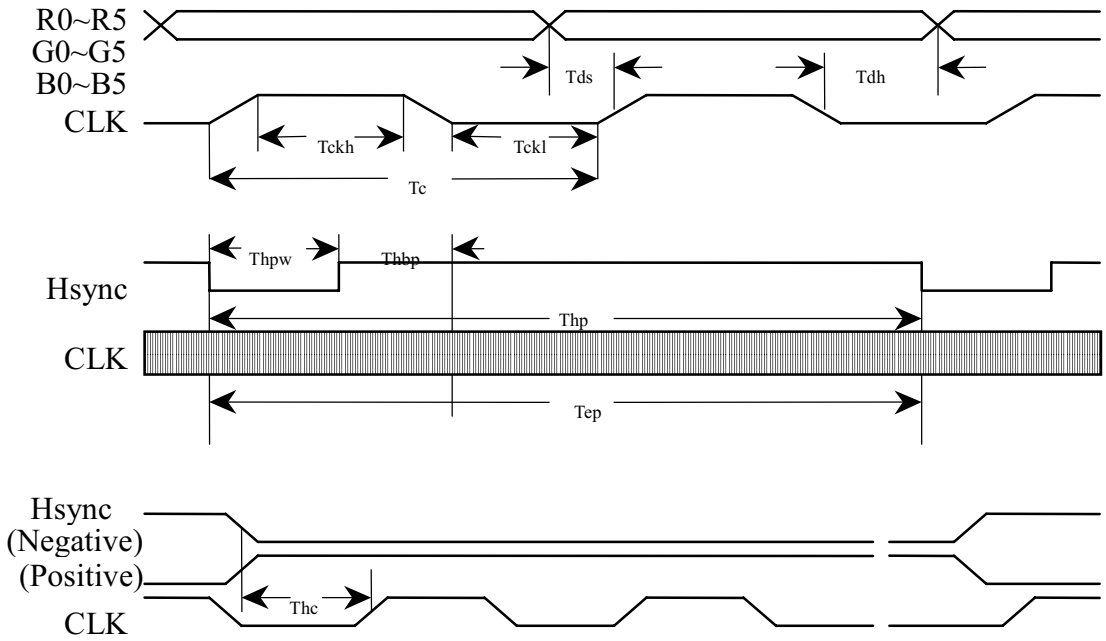

The information contained herein is the exclusive property of Prime View International Co., Ltd. and shall not be distributed, reproduced, or disclosed in whole or in part without prior written permission of Prime View International Co., Ltd.

(3). Detail of Horizontal Timing :

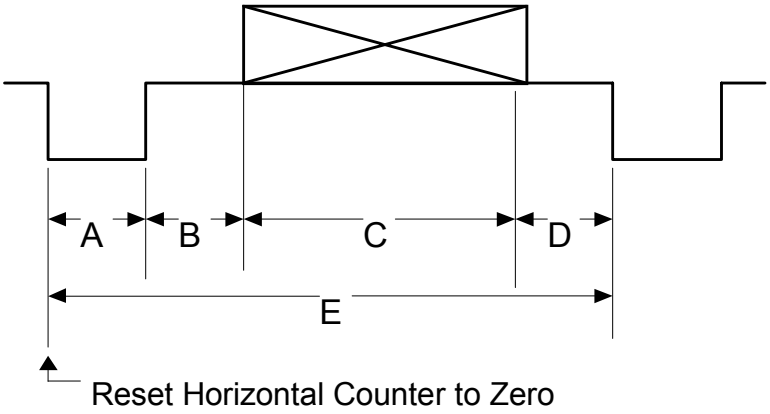

Item	Description	Clock Cycles	Time
A	Horizontal Width	96	3.813 μs
B	Horizontal B-Porch	49	1.907 μs
C	Horizontal Display	640	25.422 μs
D	Horizontal F-Porch	16	0.636 μs
E	Horizontal Total	800	31.778 μs

(4). Detail of Vertical Timing :

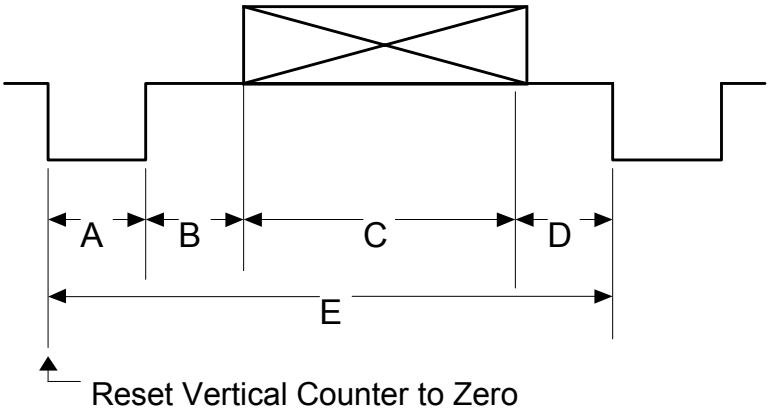

Item	Description	Horizontal Lines	Time
A	Vertical Width	2	63.5 μs
B	Vertical B-Porch	33	1.049 ms
C	Vertical Display	480	15.253 ms
D	Vertical F-Porch	10	317.8 μs
E	Vertical Total	525	16.683 ms

The information contained herein is the exclusive property of Prime View International Co., Ltd. and shall not be distributed, reproduced, or disclosed in whole or in part without prior written permission of Prime View International Co., Ltd.

7-5) Pixel Arrangement

The LCD module pixel arrangement is the stripe.

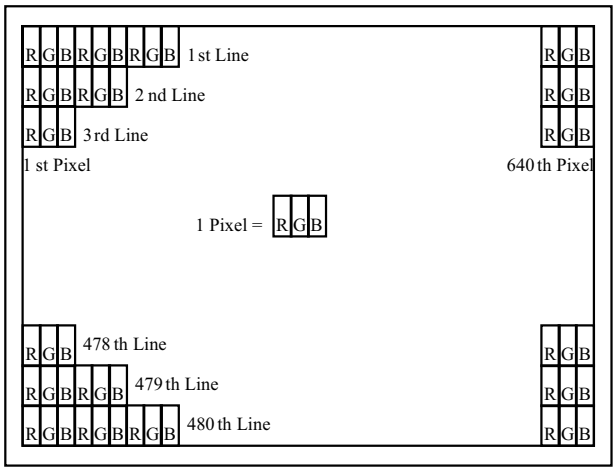

The information contained herein is the exclusive property of Prime View International Co., Ltd. and shall not be distributed, reproduced, or disclosed in whole or in part without prior written permission of Prime View International Co., Ltd.

7-6) Display Color and Gray Scale Reference

Color		Input Color Data																	
		Red						Green						Blue					
		R5	**R4**	**R3**	**R2**	**R1**	**R0**	**G5**	**G4**	**G3**	**G2**	**G1**	**G0**	**B5**	**B4**	**B3**	**B2**	**B1**	**B0**
Basic Colors	Black	0	0	0	0	0	0	0	0	0	0	0	0	0	0	0	0	0	0
	Red (63)	1	1	1	1	1	1	0	0	0	0	0	0	0	0	0	0	0	0
	Green (63)	0	0	0	0	0	0	1	1	1	1	1	1	0	0	0	0	0	0
	Blue (63)	0	0	0	0	0	0	0	0	0	0	0	0	1	1	1	1	1	1
	Cyan	0	0	0	0	0	0	1	1	1	1	1	1	1	1	1	1	1	1
	Magenta	1	1	1	1	1	1	0	0	0	0	0	0	1	1	1	1	1	1
	Yellow	1	1	1	1	1	1	1	1	1	1	1	1	0	0	0	0	0	0
	White	1	1	1	1	1	1	1	1	1	1	1	1	1	1	1	1	1	1
Red	Red (00)	0	0	0	0	0	0	0	0	0	0	0	0	0	0	0	0	0	0
	Red (01)	0	0	0	0	0	1	0	0	0	0	0	0	0	0	0	0	0	0
	Red (02)	0	0	0	0	1	0	0	0	0	0	0	0	0	0	0	0	0	0
	Darker																		
	↓	↓	↓	↓	↓	↓	↓	↓	↓	↓	↓	↓	↓	↓	↓	↓	↓	↓	↓
	Brighter																		
	Red (61)	1	1	1	1	0	1	0	0	0	0	0	0	0	0	0	0	0	0
	Red (62)	1	1	1	1	1	0	0	0	0	0	0	0	0	0	0	0	0	0
	Red (63)	1	1	1	1	1	1	0	0	0	0	0	0	0	0	0	0	0	0
Green	Green (00)	0	0	0	0	0	0	0	0	0	0	0	0	0	0	0	0	0	0
	Green (01)	0	0	0	0	0	0	0	0	0	0	0	1	0	0	0	0	0	0
	Green (02)	0	0	0	0	0	0	0	0	0	0	1	0	0	0	0	0	0	0
	Darker																		
	↓	↓	↓	↓	↓	↓	↓	↓	↓	↓	↓	↓	↓	↓	↓	↓	↓	↓	↓
	Brighter																		
	Green (61)	0	0	0	0	0	0	1	1	1	1	0	1	0	0	0	0	0	0
	Green (62)	0	0	0	0	0	0	1	1	1	1	1	0	0	0	0	0	0	0
	Green (63)	0	0	0	0	0	0	1	1	1	1	1	1	0	0	0	0	0	0
Blue	Blue (00)	0	0	0	0	0	0	0	0	0	0	0	0	0	0	0	0	0	0
	Blue (01)	0	0	0	0	0	0	0	0	0	0	0	0	0	0	0	0	0	1
	Blue (02)	0	0	0	0	0	0	0	0	0	0	0	0	0	0	0	0	1	0
	Darker																		
	↓	↓	↓	↓	↓	↓	↓	↓	↓	↓	↓	↓	↓	↓	↓	↓	↓	↓	↓
	Brighter																		
	Blue (61)	0	0	0	0	0	0	0	0	0	0	0	0	1	1	1	1	0	1
	Blue (62)	0	0	0	0	0	0	0	0	0	0	0	0	1	1	1	1	1	0
	Blue (63)	0	0	0	0	0	0	0	0	0	0	0	0	1	1	1	1	1	1

The information contained herein is the exclusive property of Prime View International Co., Ltd. and shall not be distributed, reproduced, or disclosed in whole or in part without prior written permission of Prime View International Co., Ltd.

8. Power On Sequence

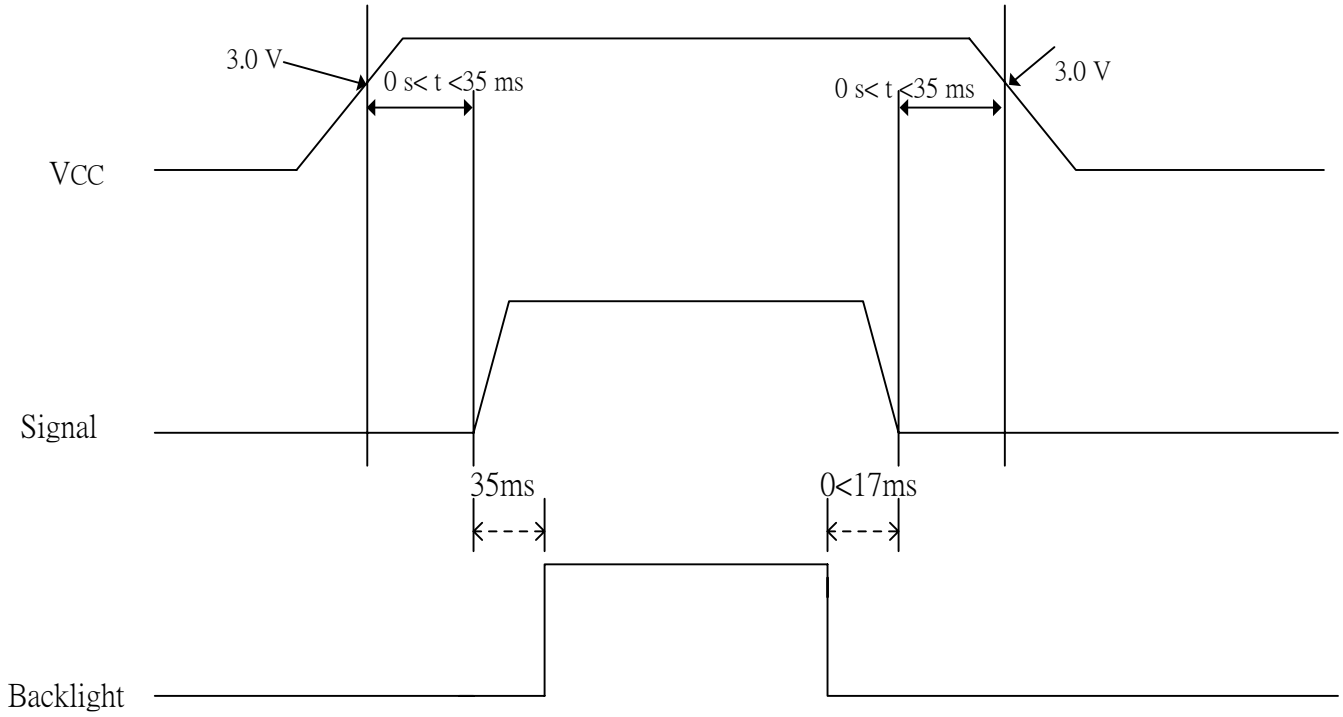

1. The supply voltage for input signals should be same as $V_{CC.}$

2. When the power is off , please keep whole signals (Hsync, Vsync, CLK, Data) low level or high impedance

The information contained herein is the exclusive property of Prime View International Co., Ltd. and shall not be distributed, reproduced, or disclosed in whole or in part without prior written permission of Prime View International Co., Ltd.

9. Optical Characteristics

9-1) Specification :

Ta=25℃

Parameter		Symbol	Condition	MIN.	TYP.	MAX.	Unit	Remarks
Viewing Angle	Horizontal	θ	CR＞10	±35	±45		deg	Note 9-3
	Vertical	θ (to 12 o'clock)		10	15	-	deg	
		θ (to 6 o'clock)		30	35	-	deg	
Contrast Ratio		CR		150	180	-	-	Note 9-1
Response time	Rise	Tr	θ =0°	-	15	30	ms	Note 9-4
	Fall	Tf		-	25	50	ms	
Brightness			θ =0°/ φ =0	120	150		cd/㎡	Note 9-2
Luminance Uniformity		U		55	80	-	%	Note 9-6
Lamp Life Time				-	20,000	-	hr	
White Chromaticity		x		0.230	0.280	0.330	-	
		y		0.270	0.320	0.370	-	
Cross Talk			θ =0°	-	-	3	%	Note 9-5

All the optical measurement shall be executed 30 minutes after backlight being turn-on. The optical characteristics shall be measured in dark room (ambient illumination on panel surface less than 1 Lux). The measuring configuration shows as following figure.

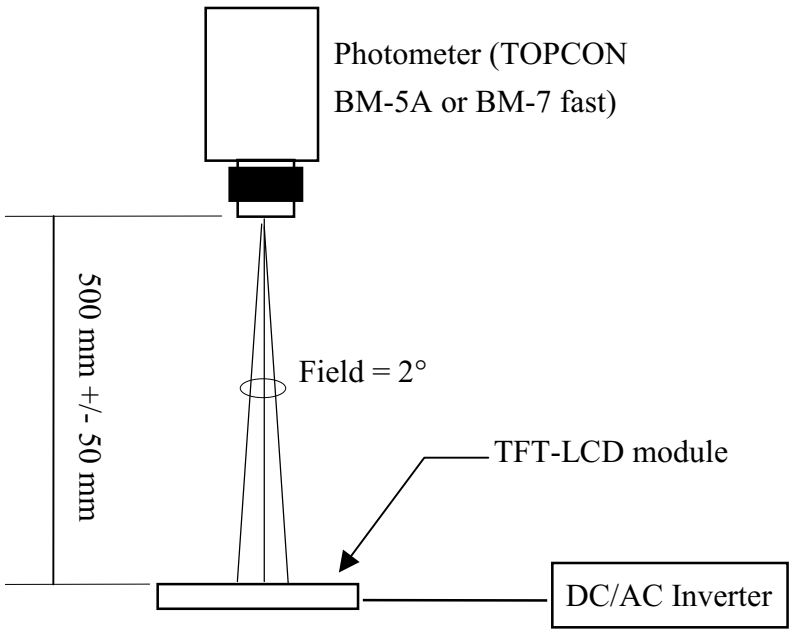

Optical characteristics measuring configuration

The information contained herein is the exclusive property of Prime View International Co., Ltd. and shall not be distributed, reproduced, or disclosed in whole or in part without prior written permission of Prime View International Co., Ltd.

Note 9-1 : CR = $\frac{\text{Luminance when LCD is White}}{\text{Luminance when LCD is Black}}$

Contrast Ratio is measured in optimum common electrode voltage.

Note 9-2 : Topcon BM-7(fast) luminance meter 2° field of view is used in the testing (after 20~30 minutes' operation).

Note 9-3 : The definitions of viewing angle diagrams :

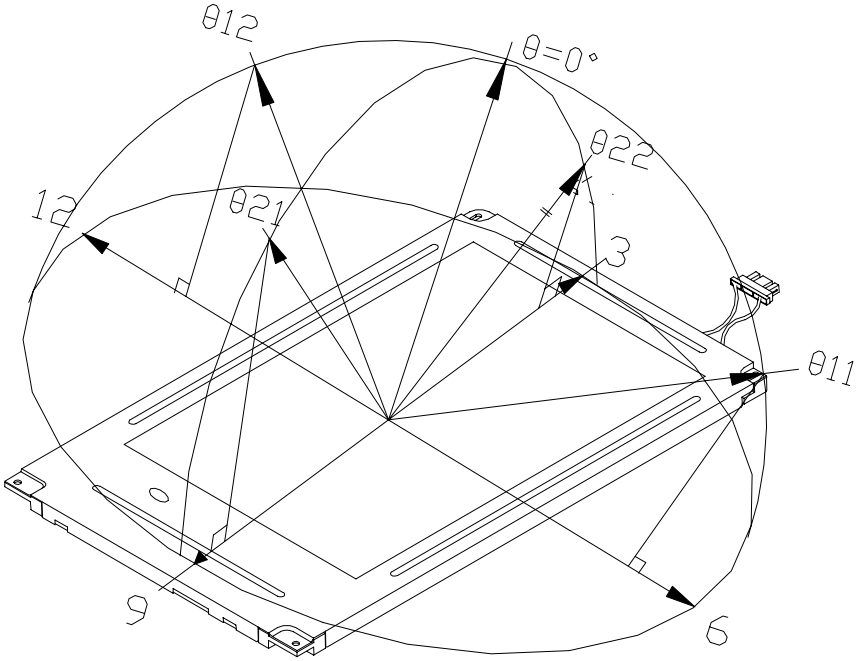

Note 9-4 : Definition of Response Time T_r and T_f:

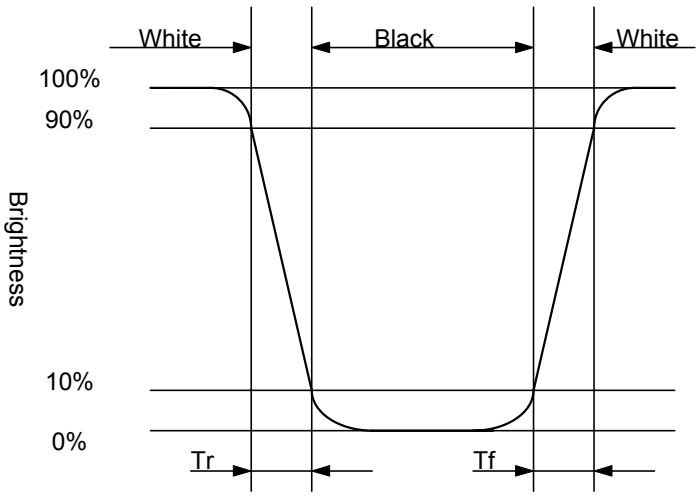

The information contained herein is the exclusive property of Prime View International Co., Ltd. and shall not be distributed, reproduced, or disclosed in whole or in part without prior written permission of Prime View International Co., Ltd.

Note 9-5 : Cross Talk (CTK) = $\frac{|YA-YB|}{YA} \times 100\%$

YA : Brightness of Pattern A

YB : Brightness of Pattern B

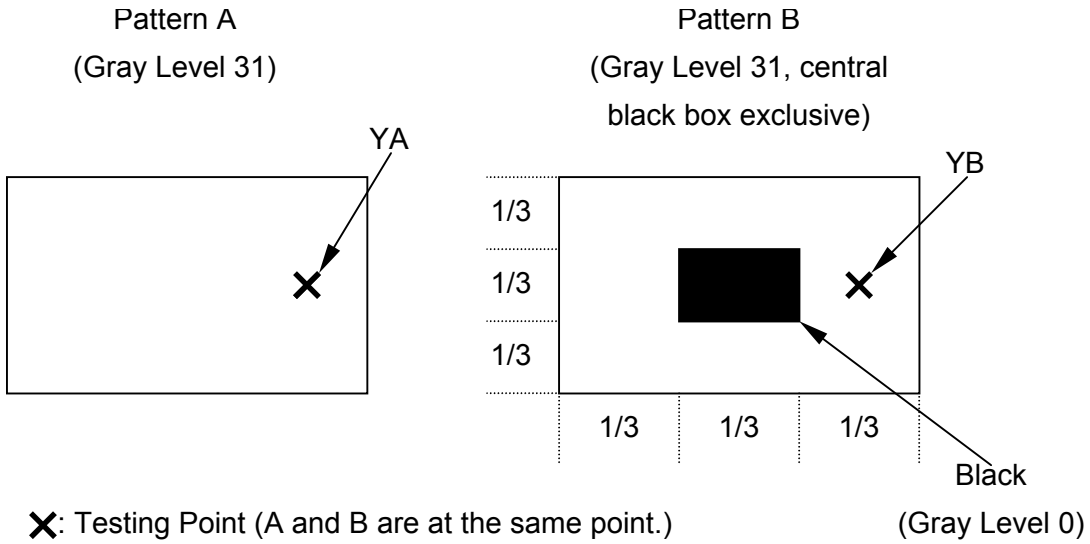

Note 9-6 : The uniformity of LCD is defined as

$$U = \frac{\text{The Minimum Brightness of the 9 testing Points}}{\text{The Maximum Brightness of the 9 testing Points}}$$

Luminance meter : BM-5A or BM-7 fast(TOPCON)
Measurement distance : 500 mm +/- 50 mm
Ambient illumination : < 1 Lux
Measuring direction : Perpendicular to the surface of module

The test pattern is white (Gray Level 63).

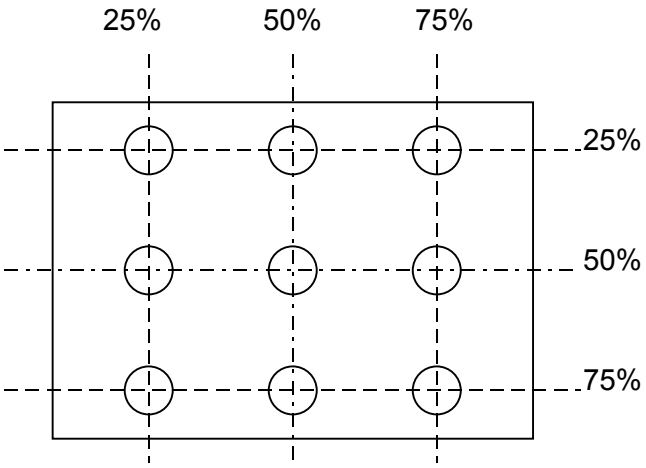

The information contained herein is the exclusive property of Prime View International Co., Ltd. and shall not be distributed, reproduced, or disclosed in whole or in part without prior written permission of Prime View International Co., Ltd.

10. Handling Cautions

10-1) Mounting of module

a) Please power off the module when you connect the input/output connector.

b) Please connect the ground pattern of the inverter circuit surely. If the connection is not perfect, some following problems may happen possibly.

1.The noise from the backlight unit will increase.

2.The output from inverter circuit will be unstable.

3.In some cases a part of module will heat.

c) Polarizer which is made of soft material and susceptible to flaw must be handled carefully.

d) Protective film (Laminator) is applied on surface to protect it against scratches and dirts. It is recommended to peel off the laminator before use and taking care of static electricity.

10-2) Precautions in mounting

a) When metal part of the TFT-LCD module (shielding lid and rear case) is soiled, wipe it with soft dry cloth.

b) Wipe off water drops or finger grease immediately. Long contact with water may cause discoloration or spots.

c) TFT-LCD module uses glass which breaks or cracks easily if dropped or bumped on hard surface. Please handle with care.

d) Since CMOS LSI is used in the module. So take care of static electricity and earth yourself when handling.

10-3) Adjusting module

a) Adjusting volumes on the rear face of the module have been set optimally before shipment.

b) Therefore, do not change any adjusted values. If adjusted values are changed, the specifications described may not be satisfied.

10-4) Others

a) Do not expose the module to direct sunlight or intensive ultraviolet rays for many hours.

b) Store the module at a room temperature place.

c) The voltage of beginning electric discharge may over the normal voltage because of leakage current from approach conductor by to draw lump read lead line around.

d) If LCD panel breaks, it is possibly that the liquid crystal escapes from the panel. Avoid putting it into eyes or mouth. When liquid crystal sticks on hands, clothes or feet. Wash it out immediately with soap.

e) Observe all other precautionary requirements in handling general electronic components.

f) Please adjust the voltage of common electrode as material of attachment by 1 module.

The information contained herein is the exclusive property of Prime View International Co., Ltd. and shall not be distributed, reproduced, or disclosed in whole or in part without prior written permission of Prime View International Co., Ltd.

11. Reliability Test

No	Test Item	Test Condition
1	High Temperature Storage Test	Ta = +70 ℃, 240 hrs
2	Low Temperature Storage Test	Ta = -20 ℃, 240 hrs
3	High Temperature Operation Test	Ta = +60 ℃, 240 hrs
4	Low Temperature Operation Test	Ta = 0 ℃, 240 hrs
5	High Temperature & High Humidity Operation Test	Ta = +40 ℃, 95%RH, 240 hrs
6	Thermal Cycling Test (non-operating))	-25℃ →+25℃ →+70℃，200 Cycles 30 min 5min 30min
7	Vibration Test (non-operating)	Frequency：10 ~ 57 H_Z/Vibration Width :0.075mm 58-500 H_Z/ Gravity :9.8m/s² Sweep time: 11 minutes Test period: 3 hrs for each direction of X, Y, Z
8	Shock Test (non-operating)	Gravity :490m/s² Direction: ±X, ±Y, ±Z Pulse Width :11ms,half sine wave
9	Electrostatic Discharge Test (non-operating)	150pF，330Ω Air : ±15KV；Contact : ±8KV 10 times/point，9 point/panel face

Ta: ambient temperature

[Judgement Criteria]
Under the display quality test conditions with normal operation state , there should be no change which may affect practical display function.

12. Indication of Lot Number Label

a) Indicated contents of the label

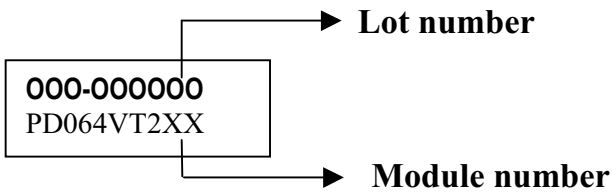

Contents of lot number : 1st—Process area : class 1000 ⇒ H
class 100K ⇒ M
2nd~3rd—Module screen size(in inch) : 1.8”⇒18, 2.5”⇒25……
5th—Production year : 1999⇒9, 2000⇒A, 2001⇒1……..
6th—Production month : 1, 2, 3,….9, A, B, C
7th~10th—Serial numbers : 0001~9999

The information contained herein is the exclusive property of Prime View International Co., Ltd. and shall not be distributed, reproduced, or disclosed in whole or in part without prior written permission of Prime View International Co., Ltd.

13. Block Diagram

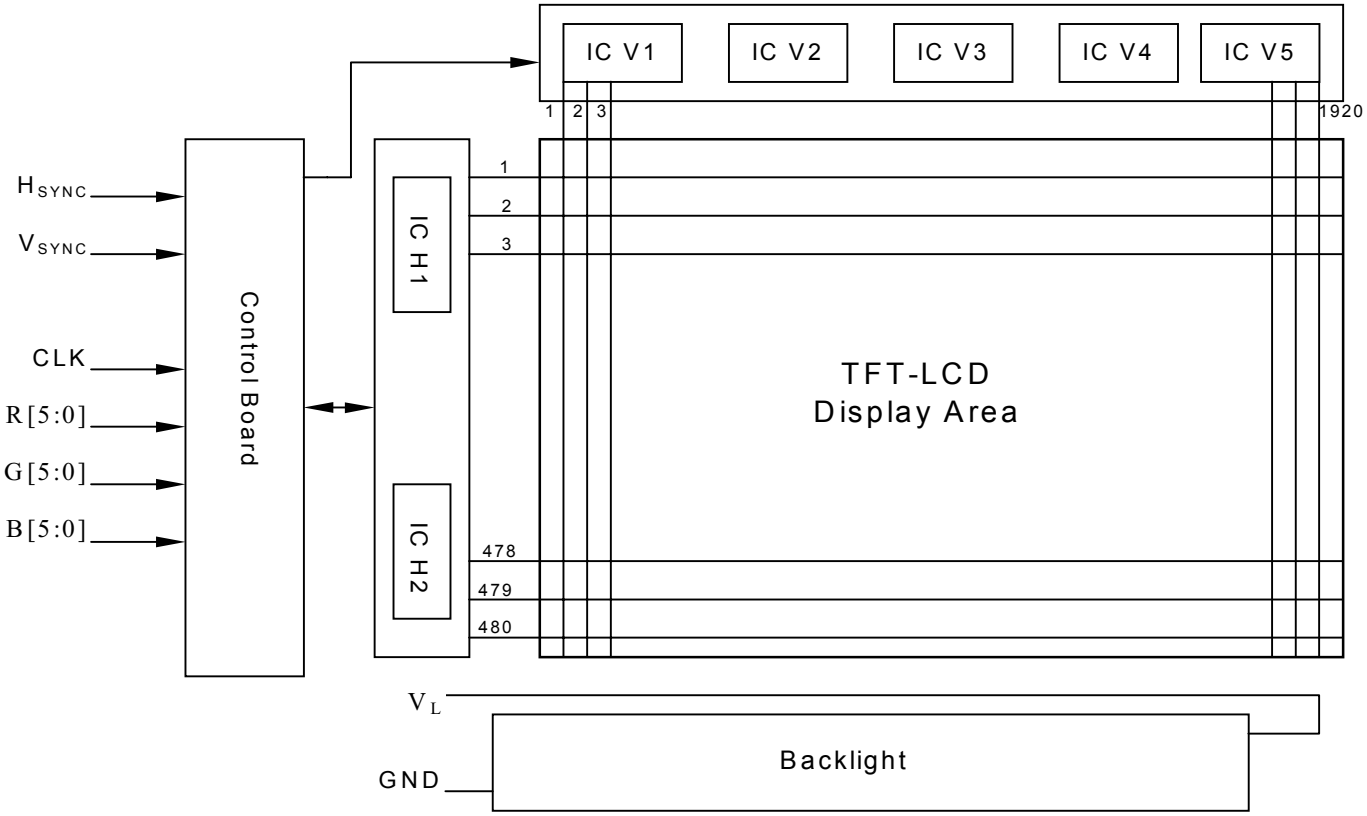

The information contained herein is the exclusive property of Prime View International Co., Ltd. and shall not be distributed, reproduced, or disclosed in whole or in part without prior written permission of Prime View International Co., Ltd.

14. Packing

ZONE	REV.	DOCUUMENT NO.	DESCRIPTION	DATE	REV.BY

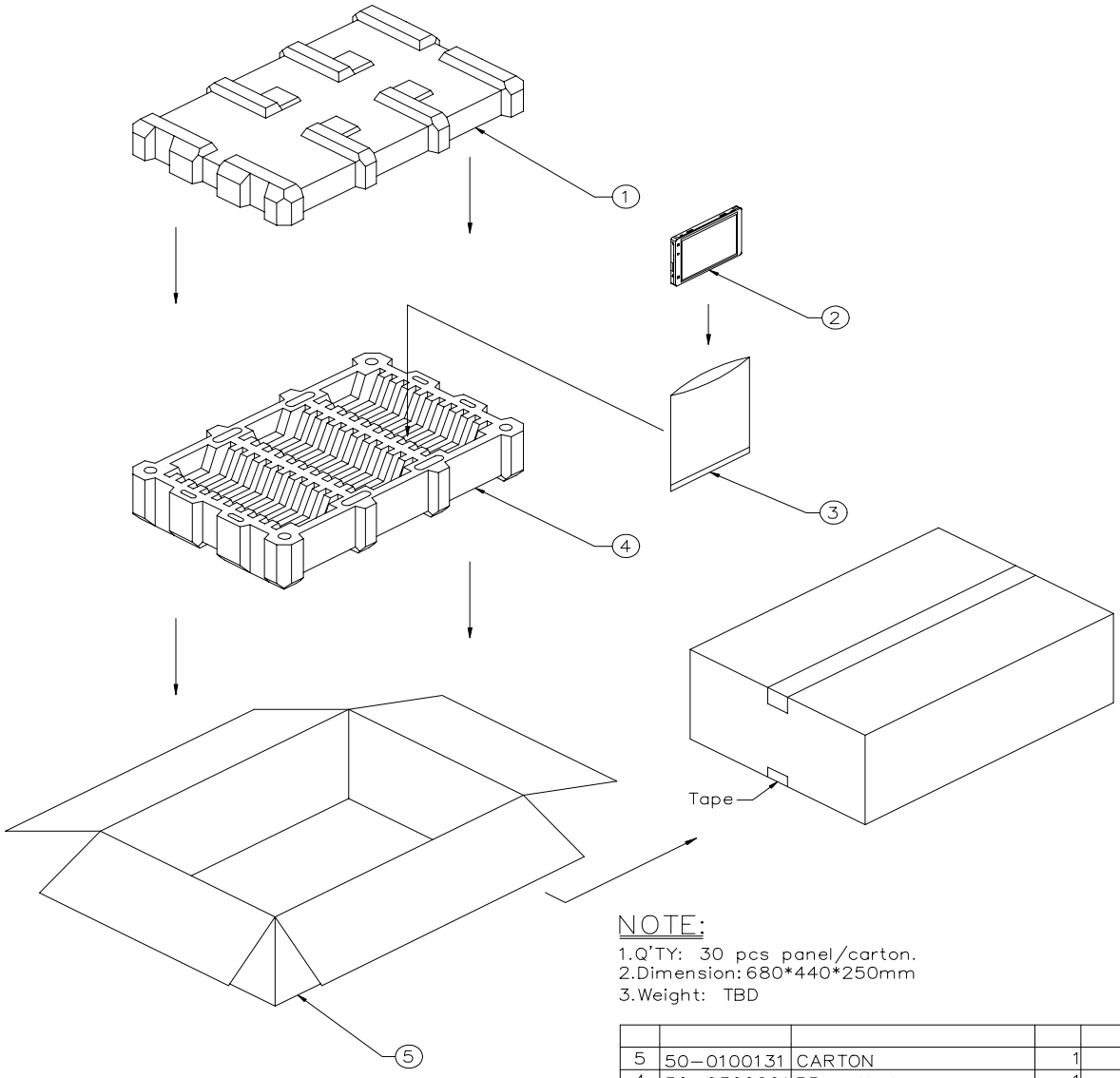

NOTE:
1.Q'TY: 30 pcs panel/carton.
2.Dimension: 680*440*250mm
3.Weight: TBD

ITEM	PART NO.	DESCRIPTION	QTY	REMARK
5	50-0100131	CARTON	1	
4	50-0300201	PP緩衝材 底座	1	
3	50-0500051	Pink Bag 150*250mm	30	抗靜電
2	PD064VT2T1		30	
1	50-0300191	PP緩衝材 上蓋	1	

MTL.SPEC.	UNSPECIFIED TOL'S ANGLE ROUGHNESS	REMARK	元太科技工業股份有限公司 Prime View International Co., Ltd.

APPROVE		. .	SCALE	UNIT	SHEET 1 OF 1	DWG.TITLE PD064VT2T1 Packing Draw
CHECK		. .				
DRAWN	陳 萬 典	00.08.30	MTL.NO. PD064VT2T1		DWG FILE:	REV. 01 / A4 SIZE

The information contained herein is the exclusive property of Prime View International Co., Ltd. and shall not be distributed, reproduced, or disclosed in whole or in part without prior written permission of Prime View International Co., Ltd.

Revision History

Rev.	Issued Date	Revised Contents
Preliminary (0.1)	Aug. 29, 2000	NEW
Preliminary (0.2)	Sept,21, 2000	Revise
Preliminary (0.3)	Jan.,17, 2001	Modify 1. Input signals and voltage=3.3V (typ.) 2. Page7 : Thbp=49 clock, Tvbp=33 line
Preliminary (0.4)	Feb.,20, 2001	Modify 1. Page6 : Oscillation=64KHZ ADD 1. Page6 : Kick-off voltage
Preliminary (0.5)	June, 04, 2001	Modify 1. 5-1) input pin define pin26 modify from “DENB” to ”NC” 2. 7-1) Recommended operation condition Min. Input voltage modify from 3.0V to 3.15V 3. Erase original (7-6) Horizontal Display position, this section describes the “DENB” definition, which is useless in this module.
Preliminary (0.6)	July 20, 2001	Modify 1. Page4: 4.Mechanical Drawing of TFT-LCD Module 2. Page5: Connector(1) type : ELCO , 6210-30PIN
1.0	Aug 09,2001	Add Page12: Power On Sequence
1.1	Aug 15,2001	Modify 1. Page4:4.Mechanical Drawing of TFT-LCD Module 2. Page6:+3.3V Max. Supply Voltage from 7.0V to 4.0V.
1.2	Oct 17,2001	Add 1. Page14: Luminance Uniformity 2. Page14: Brightness measurement method 3. Pade15: Note 9-4: Definition of Response Time Tr and Tf
1.3	Dec 11,2001	Add Page17: Handling Cautions Page18: Indication of Lot Number Label
1.4	Apr. 10, 2002	Modify Page 7 : Driving for backlight Page 8 : Power Consumption
1.5	Apr. 12, 2002	Modify Page 14 : Optical Characteristics (Brightness)

The information contained herein is the exclusive property of Prime View International Co., Ltd. and shall not be distributed, reproduced, or disclosed in whole or in part without prior written permission of Prime View International Co., Ltd.